International
IOR Rectifier

PD -95104

IRF1404SPbF
IRF1404LPbF

HEXFET® Power MOSFET

- Advanced Process Technology
- Ultra Low On-Resistance
- Dynamic dv/dt Rating
- 175°C Operating Temperature
- Fast Switching
- Fully Avalanche Rated
- Lead-Free

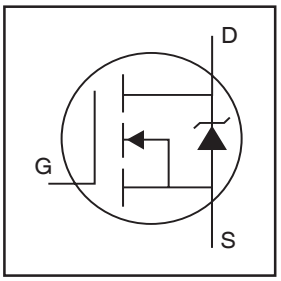

V_{DSS} = 40V

$R_{DS(on)}$ = 0.004Ω

I_D = 162A⑥

Description

Seventh Generation HEXFET® Power MOSFETs from International Rectifier utilize advanced processing techniques to achieve extremely low on-resistance per silicon area. This benefit, combined with the fast switching speed and ruggedized device design that HEXFET power MOSFETs are well known for, provides the designer with an extremely efficient and reliable device for use in a wide variety of applications.

The D^2Pak is a surface mount power package capable of accommodating die sizes up to HEX-4. It provides the highest power capability and the lowest possible on-resistance in any existing surface mount package. The D^2Pak is suitable for high current applications because of its low internal connection resistance and can dissipate up to 2.0W in a typical surface mount application.
The through-hole version (IRF1404L) is available for low-profile applications.

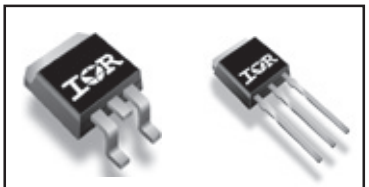

D^2Pak IRF1404SPbF | TO-262 IRF1404LPbF

Absolute Maximum Ratings

	Parameter	Max.	Units
I_D @ T_C = 25°C	Continuous Drain Current, V_{GS} @ 10V⑦	162⑥	A
I_D @ T_C = 100°C	Continuous Drain Current, V_{GS} @ 10V⑦	115⑥	
I_{DM}	Pulsed Drain Current ①⑦	650	
P_D @T_A = 25°C	Power Dissipation	3.8	W
P_D @T_C = 25°C	Power Dissipation	200	W
	Linear Derating Factor	1.3	W/°C
V_{GS}	Gate-to-Source Voltage	± 20	V
E_{AS}	Single Pulse Avalanche Energy⑦	519	mJ
I_{AR}	Avalanche Current①	95	A
E_{AR}	Repetitive Avalanche Energy①	20	mJ
dv/dt	Peak Diode Recovery dv/dt ③⑦	5.0	V/ns
T_J	Operating Junction and	-55 to +175	°C
T_{STG}	Storage Temperature Range	-55 to +175	
	Soldering Temperature, for 10 seconds	300 (1.6mm from case)	

Thermal Resistance

	Parameter	Typ.	Max.	Units
$R_{\theta JC}$	Junction-to-Case	——	0.75	°C/W
$R_{\theta JA}$	Junction-to-Ambient (PCB mounted, steady-state)*	——	40	

03/11/04

Electrical Characteristics @ T_J = 25°C (unless otherwise specified)

	Parameter	Min.	Typ.	Max.	Units	Conditions
$V_{(BR)DSS}$	Drain-to-Source Breakdown Voltage	40	——	——	V	V_{GS} = 0V, I_D = 250μA
$\Delta V_{(BR)DSS}/\Delta T_J$	Breakdown Voltage Temp. Coefficient	——	0.036	——	V/°C	Reference to 25°C, I_D = 1mA
$R_{DS(on)}$	Static Drain-to-Source On-Resistance	——	0.0035	0.004	Ω	V_{GS} = 10V, I_D = 95A ④
$V_{GS(th)}$	Gate Threshold Voltage	2.0	——	4.0	V	V_{DS} = 10V, I_D = 250μA
g_{fs}	Forward Transconductance	106	——	——	S	V_{DS} = 25V, I_D = 60A⑦
I_{DSS}	Drain-to-Source Leakage Current	——	——	20	μA	V_{DS} = 40V, V_{GS} = 0V
		——	——	250		V_{DS} = 32V, V_{GS} = 0V, T_J = 150°C
I_{GSS}	Gate-to-Source Forward Leakage	——	——	200	nA	V_{GS} = 20V
	Gate-to-Source Reverse Leakage	——	——	-200		V_{GS} = -20V
Q_g	Total Gate Charge	——	160	200	nC	I_D = 95A
Q_{gs}	Gate-to-Source Charge	——	35	——		V_{DS} = 32V
Q_{gd}	Gate-to-Drain ("Miller") Charge	——	42	60		V_{GS} = 10V ④⑦
$t_{d(on)}$	Turn-On Delay Time	——	17	——	ns	V_{DD} = 20V
t_r	Rise Time	——	140	——		I_D = 95A
$t_{d(off)}$	Turn-Off Delay Time	——	72	——		R_G = 2.5Ω
t_f	Fall Time	——	26	——		R_D = 0.21Ω ④⑦
L_S	Internal Source Inductance	——	7.5	——	nH	Between lead, and center of die contact
C_{iss}	Input Capacitance	——	7360	——	pF	V_{GS} = 0V
C_{oss}	Output Capacitance	——	1680	——		V_{DS} = 25V
C_{rss}	Reverse Transfer Capacitance	——	240	——		f = 1.0MHz, See Fig. 5 ⑦
C_{oss}	Output Capacitance	——	6630	——		V_{GS} = 0V, V_{DS} = 1.0V, f = 1.0MHz
C_{oss}	Output Capacitance	——	1490	——		V_{GS} = 0V, V_{DS} = 32V, f = 1.0MHz
C_{oss} eff.	Effective Output Capacitance ⑤⑦	——	1540	——		V_{GS} = 0V, V_{DS} = 0V to 32V

Source-Drain Ratings and Characteristics

	Parameter	Min.	Typ.	Max.	Units	Conditions
I_S	Continuous Source Current (Body Diode)	——	——	162⑥	A	MOSFET symbol showing the integral reverse p-n junction diode. 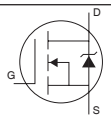
I_{SM}	Pulsed Source Current (Body Diode) ①	——	——	650		
V_{SD}	Diode Forward Voltage	——	——	1.3	V	T_J = 25°C, I_S = 95A, V_{GS} = 0V ④
t_{rr}	Reverse Recovery Time	——	71	110	ns	T_J = 25°C, I_F = 95A
Q_{rr}	Reverse RecoveryCharge	——	180	270	nC	di/dt = 100A/μs ④⑦
t_{on}	Forward Turn-On Time	Intrinsic turn-on time is negligible (turn-on is dominated by L_S+L_D)				

Notes:

① Repetitive rating; pulse width limited by max. junction temperature. (See fig. 11)

② Starting T_J = 25°C, L = 0.12mH R_G = 25Ω, I_{AS} = 95A. (See Figure 12)

③ $I_{SD} \leq$ 95A, di/dt $\leq$ 150A/μs, $V_{DD} \leq V_{(BR)DSS}$, $T_J \leq$ 175°C

④ Pulse width $\leq$ 300μs; duty cycle $\leq$ 2%.

⑤ C_{oss} eff. is a fixed capacitance that gives the same charging time as C_{oss} while V_{DS} is rising from 0 to 80% V_{DSS}

⑥ Calculated continuous current based on maximum allowable junction temperature. Package limitation current is 75A

⑦ Use IRF1404 data and test conditions.

* When mounted on 1" square PCB (FR-4 or G-10 Material).
For recommended footprint and soldering techniques refer to application note #AN-994.

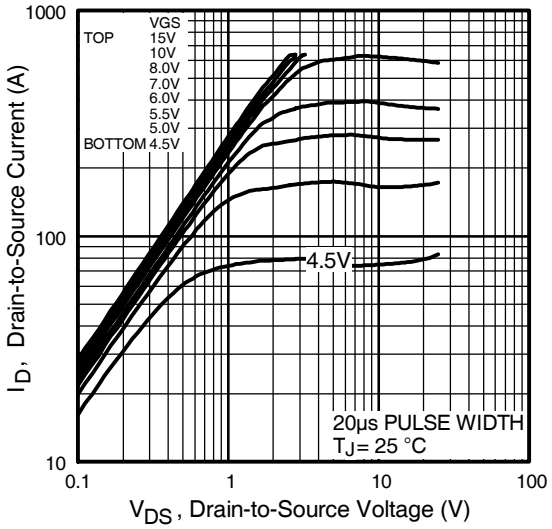

Fig 1. Typical Output Characteristics

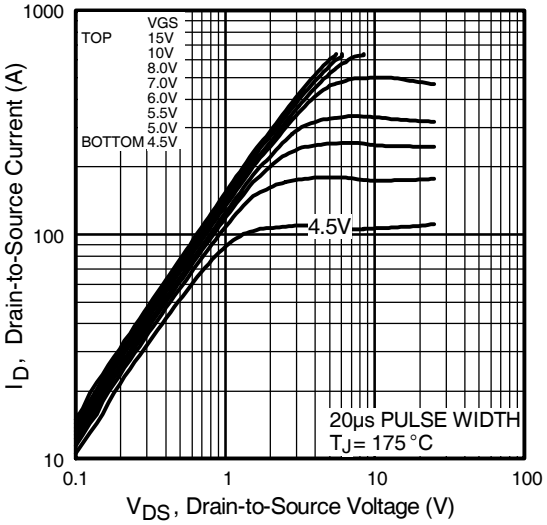

Fig 2. Typical Output Characteristics

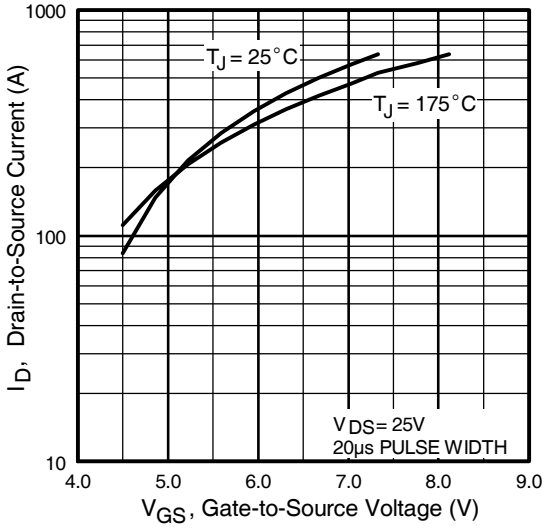

Fig 3. Typical Transfer Characteristics

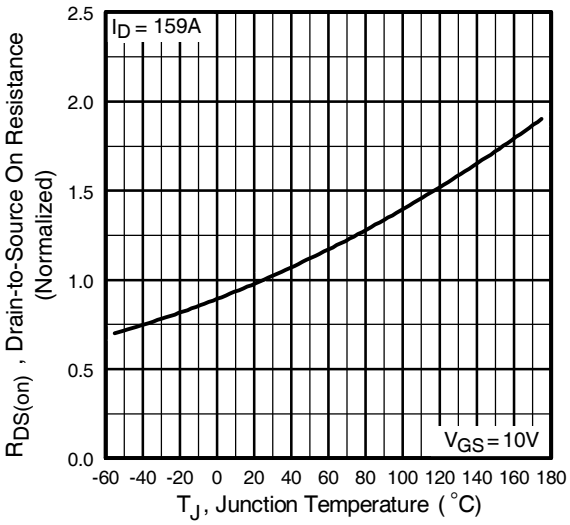

Fig 4. Normalized On-Resistance Vs. Temperature

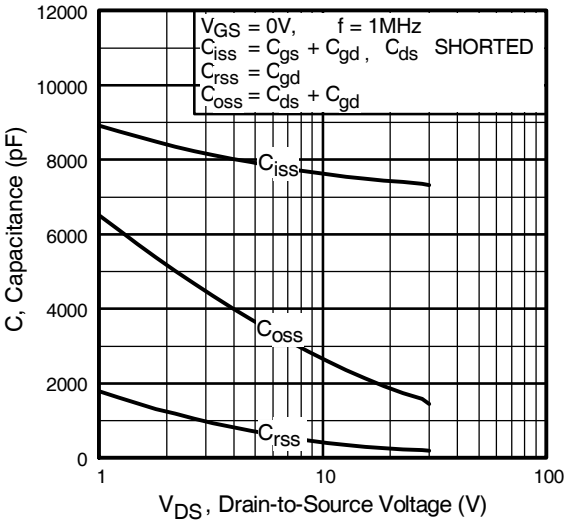

Fig 5. Typical Capacitance Vs. Drain-to-Source Voltage

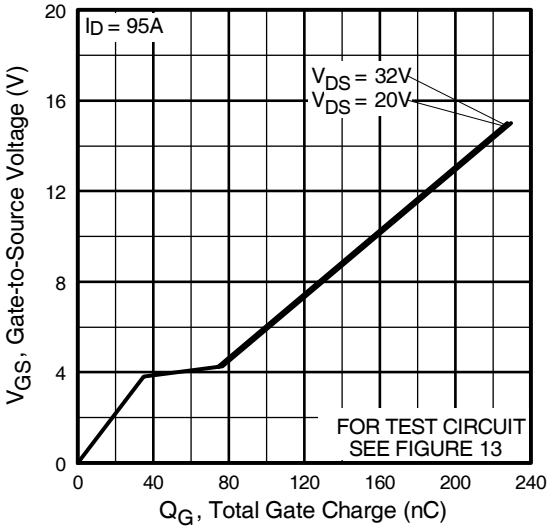

Fig 6. Typical Gate Charge Vs. Gate-to-Source Voltage

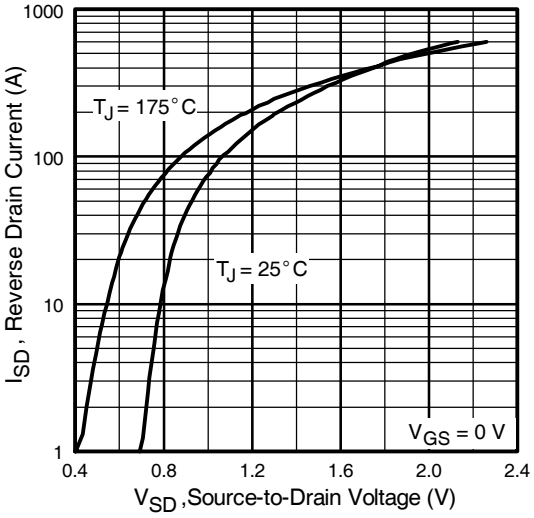

Fig 7. Typical Source-Drain Diode Forward Voltage

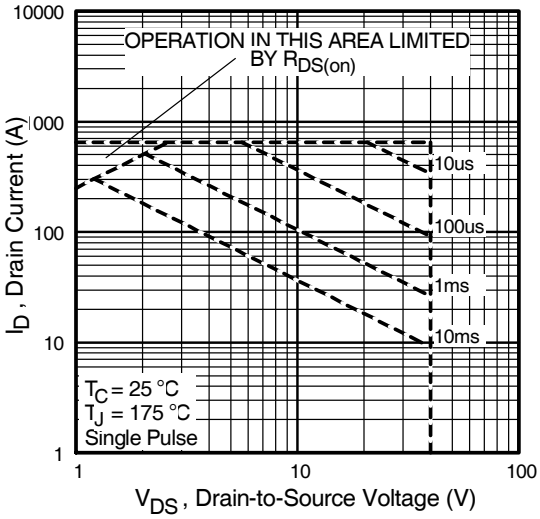

Fig 8. Maximum Safe Operating Area

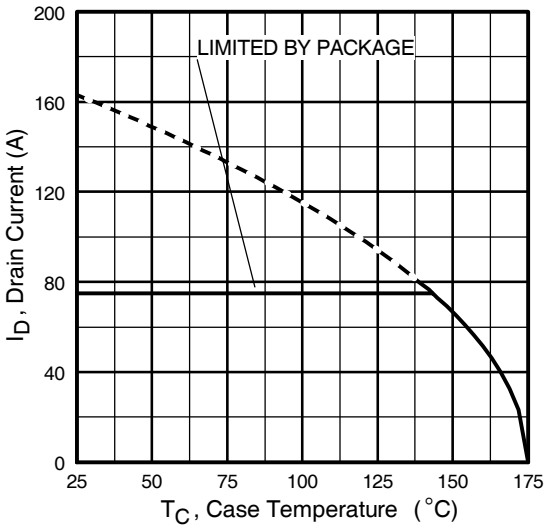

Fig 9. Maximum Drain Current Vs. Case Temperature

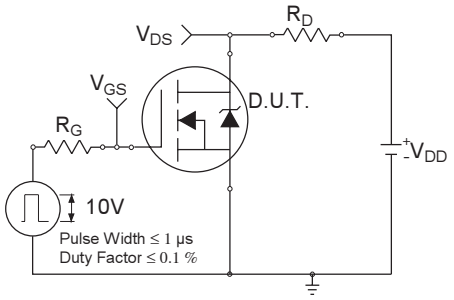

Fig 10a. Switching Time Test Circuit

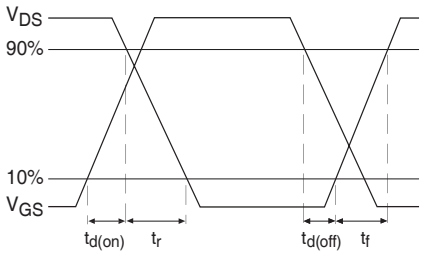

Fig 10b. Switching Time Waveforms

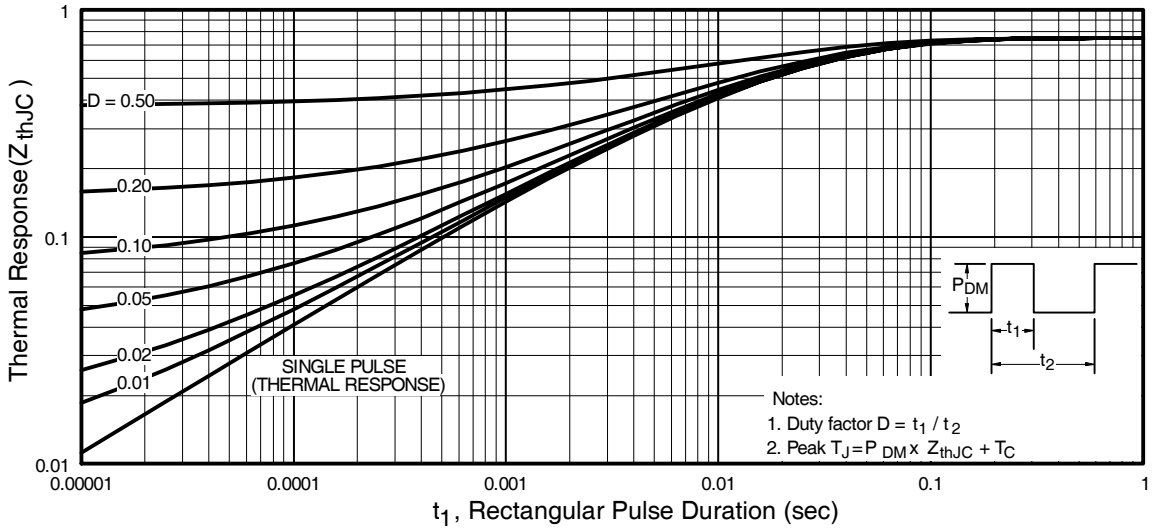

Fig 11. Maximum Effective Transient Thermal Impedance, Junction-to-Case

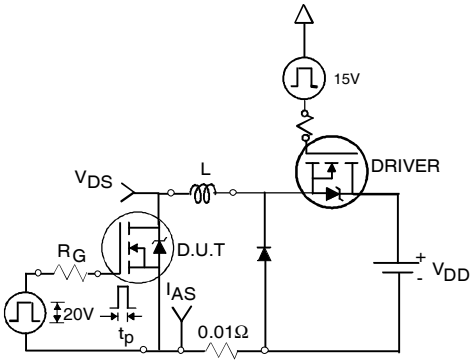

Fig 12a. Unclamped Inductive Test Circuit

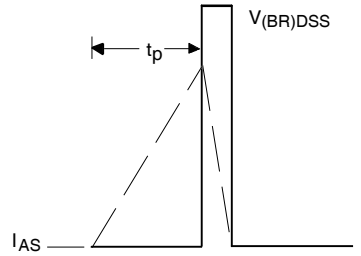

Fig 12b. Unclamped Inductive Waveforms

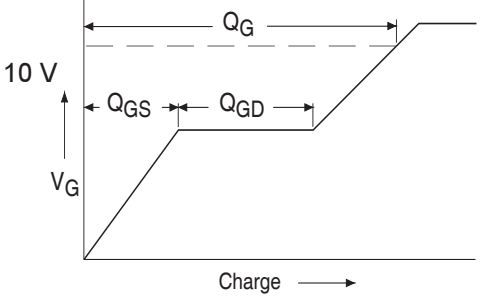

Fig 13a. Basic Gate Charge Waveform

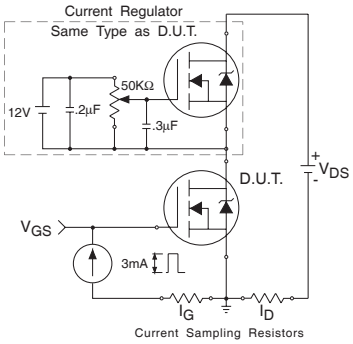

Fig 13b. Gate Charge Test Circuit

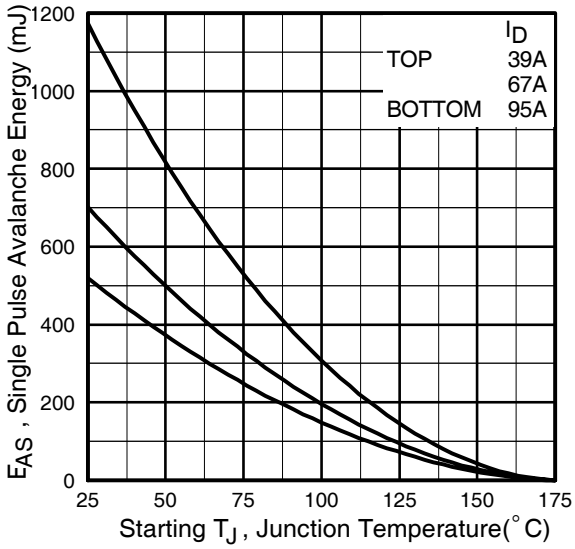

Fig 12c. Maximum Avalanche Energy Vs. Drain Current

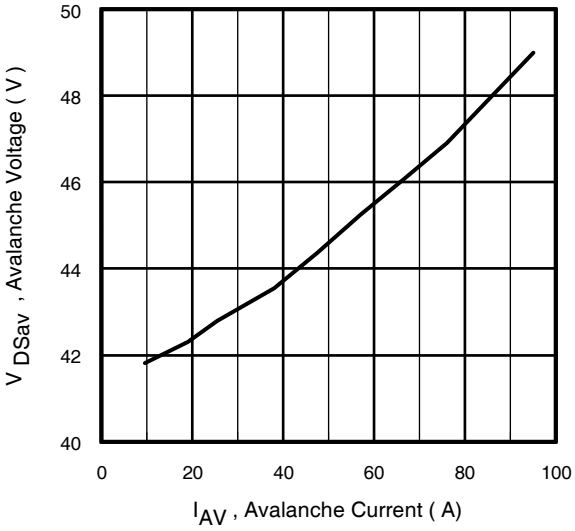

Fig 12d. Typical Drain-to-Source Voltage Vs. Avalanche Current

Peak Diode Recovery dv/dt Test Circuit

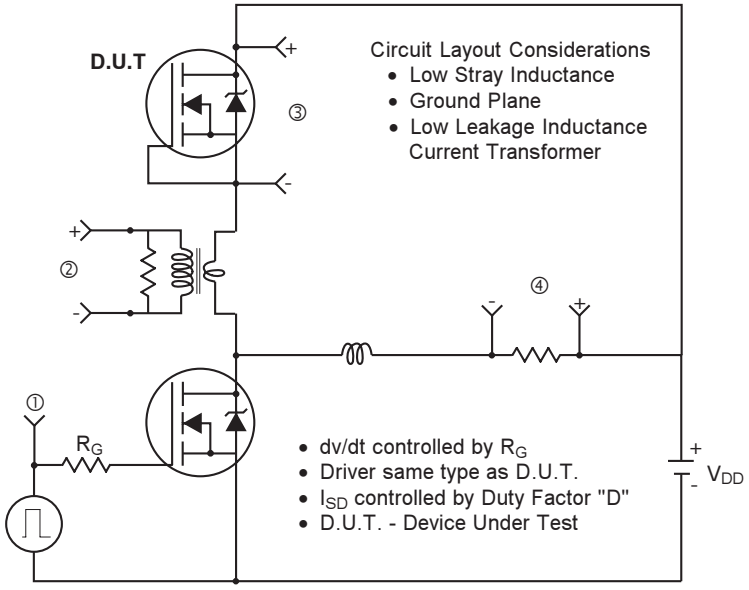

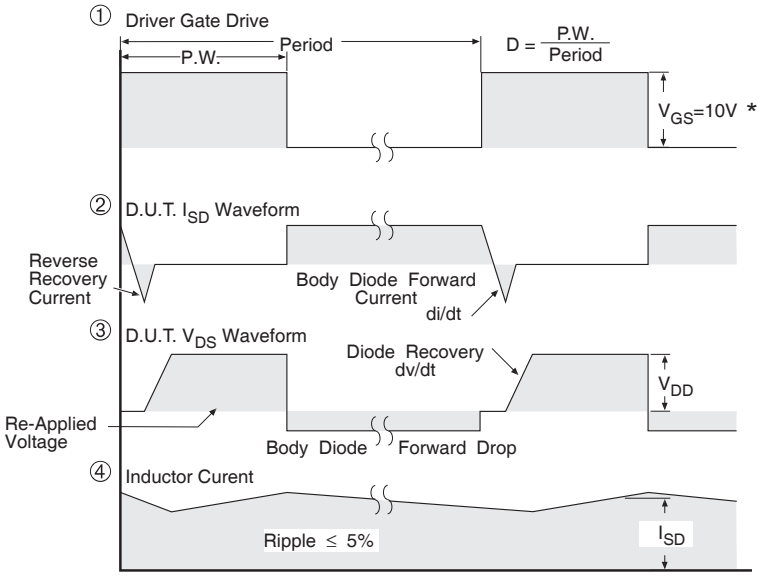

* V_{GS} = 5V for Logic Level Devices

Fig 14. For N-channel HEXFET® Power MOSFETs

D²Pak Package Outline

Dimensions are shown in millimeters (inches)

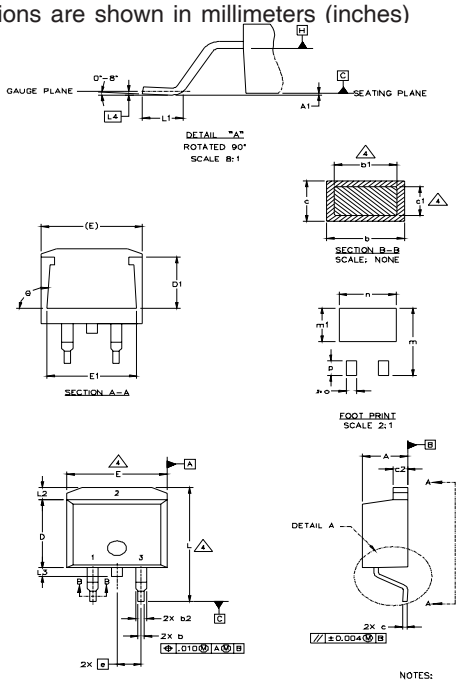

SYMBOL	DIMENSIONS				NOTES
	MILLIMETERS		INCHES		
	MIN.	MAX.	MIN.	MAX.	
A	4.06	4.83	.160	.190	
A1		0.127		.005	
b	0.51	0.99	.020	.039	
b1	0.51	0.89	.020	.035	4
b2	1.14	1.40	.045	.055	
c	0.43	0.63	.017	.025	
c1	0.38	0.74	.015	.029	4
c2	1.14	1.40	.045	.055	
D	8.51	9.65	.335	.380	3
D1	5.33		.210		
E	9.65	10.67	.380	.420	3
E1	6.22		.245		
e	2.54 BSC		.100 BSC		
L	14.61	15.88	.575	.625	
L1	1.78	2.79	.070	.110	
L2		1.65		.065	
L3	1.27	1.78	.050	.070	
L4	0.25 BSC		.010 BSC		
m	17.78		.700		
m1	8.89		.350		
n	11.43		.450		
o	2.08		.082		
p	3.81		.150		
θ	90°	93°	90°	93°	

LEAD ASSIGNMENTS

HEXFET	IGBTs, CoPACK	DIODES
1.– GATE	1.– GATE	1.– ANODE *
2.– DRAIN	2.– COLLECTOR	2.– CATHODE
3.– SOURCE	3.– EMITTER	3.– ANODE

* PART DEPENDENT.

NOTES:

1. DIMENSIONING AND TOLERANCING PER ASME Y14.5M–1994
2. DIMENSIONS ARE SHOWN IN MILLIMETERS [INCHES].
3. DIMENSION D & E DO NOT INCLUDE MOLD FLASH. MOLD FLASH SHALL NOT EXCEED 0.127 [.005"] PER SIDE. THESE DIMENSIONS ARE MEASURED AT THE OUTMOST EXTREMES OF THE PLASTIC BODY.
4. DIMENSION b1 AND c1 APPLY TO BASE METAL ONLY.
5. CONTROLLING DIMENSION: INCH.

D²Pak Part Marking Information (Lead-Free)

EXAMPLE: THIS IS AN IRF530S WITH LOT CODE 8024
ASSEMBLED ON WW 02, 2000
IN THE ASSEMBLY LINE "L"

Note: "P" in assembly line position indicates "Lead-Free"

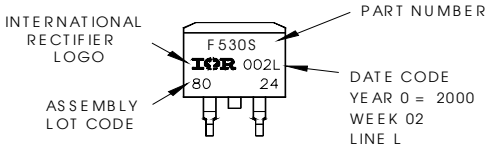

OR

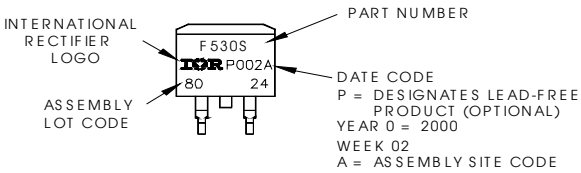

TO-262 Package Outline

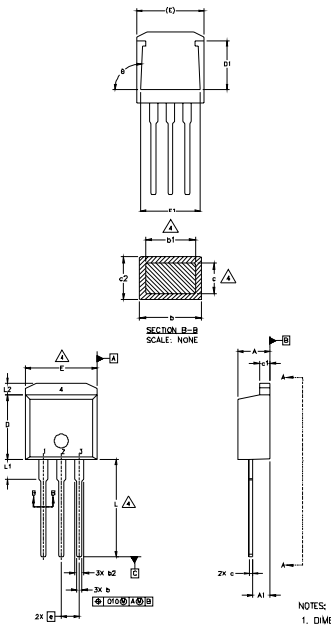

SYMBOL	DIMENSIONS				NOTES
	MILLIMETERS		INCHES		
	MIN.	MAX.	MIN.	MAX.	
A	4.06	4.83	.160	.190	
A1	2.03	2.92	.080	.115	
b	0.51	0.99	.020	.039	
b1	0.51	0.89	.020	.035	4
b2	1.14	1.40	.045	.055	
c	0.38	0.63	.015	.025	4
c1	1.14	1.40	.045	.055	
c2	0.43	.063	.017	.029	
D	8.51	9.65	.335	.380	3
D1	5.33		.210		
E	9.65	10.67	.380	.420	3
E1	6.22		.245		
e	2.54 BSC		.100 BSC		
L	13.46	14.09	.530	.555	
L1	3.56	3.71	.140	.146	
L2		1.65		.065	

LEAD ASSIGNMENTS

HEXFET
1.– GATE
2.– DRAIN
3.– SOURCE
4.– DRAIN

IGBT
1- GATE
2- COLLECTOR
3- EMITTER

NOTES:
1. DIMENSIONING AND TOLERANCING PER ASME Y14.5M-1994
2. DIMENSIONS ARE SHOWN IN MILLIMETERS [INCHES].
3. DIMENSION D & E DO NOT INCLUDE MOLD FLASH. MOLD FLASH SHALL NOT EXCEED 0.127 [.005"] PER SIDE. THESE DIMENSIONS ARE MEASURED AT THE OUTMOST EXTREMES OF THE PLASTIC BODY.
4. DIMENSION b1 AND c1 APPLY TO BASE METAL ONLY.
5. CONTROLLING DIMENSION: INCH.

TO-262 Part Marking Information

EXAMPLE: THIS IS AN IRL3103L
LOT CODE 1789
ASSEMBLED ON WW 19, 1997
IN THE ASSEMBLY LINE "C"

Note: "P" in assembly line position indicates "Lead-Free"

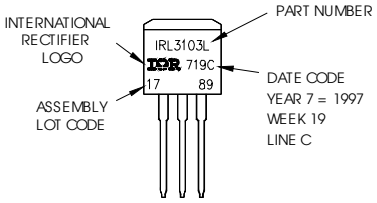

OR

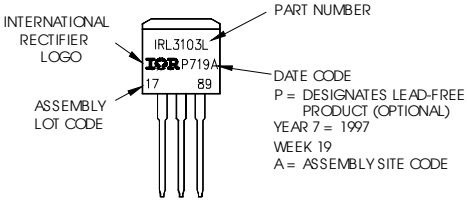

D^{2}Pak Tape & Reel Infomation

Dimensions are shown in millimeters (inches)

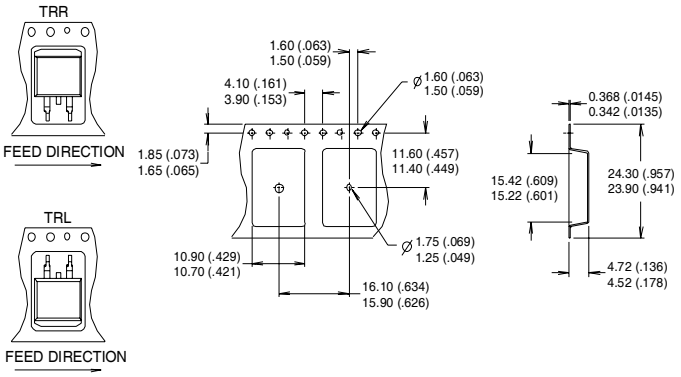

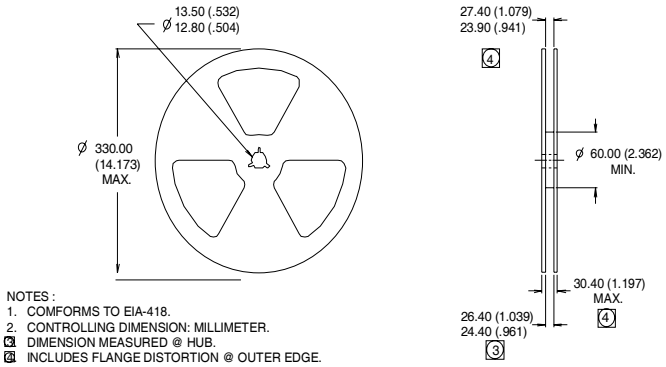

NOTES :
1. COMFORMS TO EIA-418.
2. CONTROLLING DIMENSION: MILLIMETER.
3. DIMENSION MEASURED @ HUB.
4. INCLUDES FLANGE DISTORTION @ OUTER EDGE.

Data and specifications subject to change without notice.
This product has been designed and qualified for the Industrial market.
Qualification Standards can be found on IR's Web site.

International
IOR Rectifier

IR WORLD HEADQUARTERS: 233 Kansas St., El Segundo, California 90245, USA Tel: (310) 252-7105
TAC Fax: (310) 252-7903
Visit us at www.irf.com for sales contact information.03/04

Note: For the most current drawings please refer to the IR website at:
http://www.irf.com/package/