SN74LVC1G125 Single Bus Buffer Gate With 3-State Output

1 Features

- Available in the Ultra Small 0.64-mm^2 Package (DPW) With 0.5-mm Pitch
- Supports 5-V V_{CC} Operation
- Inputs Accept Voltages to 5.5 V
- Provides Down Translation to V_{CC}
- Max t_{pd} of 3.7 ns at 3.3 V
- Low Power Consumption, 10-μA Max I_{CC}
- ±24-mA Output Drive at 3.3 V
- I_{off} Supports Live Insertion, Partial-Power-Down Mode, and Back-Drive Protection
- Latch-Up Performance Exceeds 100 mA Per JESD 78, Class II
- ESD Protection Exceeds JESD 22
  - 2000-V Human-Body Model (A114-A)
  - 200-V Machine Model (A115-A)
  - 1000-V Charged-Device Model (C101)

2 Applications

- Cable Modem Termination System
- High-Speed Data Acquisition and Generation
- Military: Radar and Sonar
- Motor Control: High-Voltage
- Power Line Communication Modem
- SSD: Internal or External
- Video Broadcasting and Infrastructure: Scalable Platform
- Video Broadcasting: IP-Based Multi-Format Transcoder
- Video Communications System

3 Description

This bus buffer gate is designed for 1.65-V to 5.5-V V_{CC} operation.

The SN74LVC1G125 device is a single line driver with a 3-state output. The output is disabled when the output-enable ($\overline{OE}$) input is high.

The CMOS device has high output drive while maintaining low static power dissipation over a broad V_{CC} operating range.

The SN74LVC1G125 device is available in a variety of packages including the ultra-small DPW package with a body size of 0.8 mm × 0.8 mm.

Device Information(1)

DEVICE NAME	PACKAGE	BODY SIZE (NOM)
SN74LVC1G125	SOT-23 (5)	2.90 mm × 1.60 mm
	SC70 (5)	2.00 mm × 1.25 mm
	SON (6)	1.45 mm × 1.00 mm
	DSBGA (5)	1.40 mm × 0.90 mm
	X2SON (4)	0.80 mm × 0.80 mm

(1) For all available packages, see the orderable addendum at the end of the data sheet.

4 Simplified Schematic

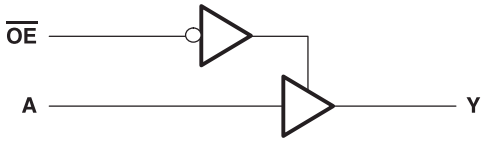

An IMPORTANT NOTICE at the end of this data sheet addresses availability, warranty, changes, use in safety-critical applications, intellectual property matters and other important disclaimers. PRODUCTION DATA.

Table of Contents

1 **Features** ... 1
2 **Applications** ... 1
3 **Description** ... 1
4 **Simplified Schematic** ... 1
5 **Revision History** ... 2
6 **Pin Configuration and Functions** ... 3
7 **Specifications** ... 4
7.1 Absolute Maximum Ratings ... 4
7.2 Handling Ratings ... 4
7.3 Recommended Operating Conditions ... 5
7.4 Thermal Information ... 5
7.5 Electrical Characteristics ... 6
7.6 Switching Characteristics, C_L = 15 pF ... 6
7.7 Switching Characteristics, –40°C to 85°C ... 6
7.8 Switching Characteristics, –40°C to 125°C ... 7
7.9 Operating Characteristics ... 7
7.10 Typical Characteristics ... 7
8 **Parameter Measurement Information** ... 8
9 **Detailed Description** ... 10
9.1 Overview ... 10
9.2 Functional Block Diagram ... 10
9.3 Feature Description ... 10
9.4 Device Functional Modes ... 10
10 **Application and Implementation** ... 11
10.1 Application Information ... 11
10.2 Typical Application ... 11
11 **Power Supply Recommendations** ... 12
12 **Layout** ... 12
12.1 Layout Guidelines ... 12
12.2 Layout Example ... 12
13 **Device and Documentation Support** ... 13
13.1 Trademarks ... 13
13.2 Electrostatic Discharge Caution ... 13
13.3 Glossary ... 13
14 **Mechanical, Packaging, and Orderable Information** ... 13

5 Revision History

Changes from Revision S (April 2014) to Revision T	Page
• Updated Device Information table.	1
• Removed PREVIEW status from DPW Pin Out drawing.	3

Changes from Revision R (April 2013) to Revision S	Page
• Added Applications.	1
• Added Pin Functions table.	3
• Updated Handling Ratings table.	4
• Added Thermal Information table.	5
• Added Typical Characteristics.	7
• Added Detailed Description section.	10
• Added Application and Implementation section.	11
• Added Power Supply Recommendations section.	12
• Added Layout section.	12

Changes from Revision Q (November 2012) to Revision R	Page
• Added Device Information table.	1
• Moved T_{stg} to Handling Ratings table.	4
• Added –40°C to 125°C Temperature range to Electrical Characteristics	6
• Added Switching Characteristics for –40°C to 125°C temperature range.	7

Copyright © 1999–2014, Texas Instruments Incorporated

6 Pin Configuration and Functions

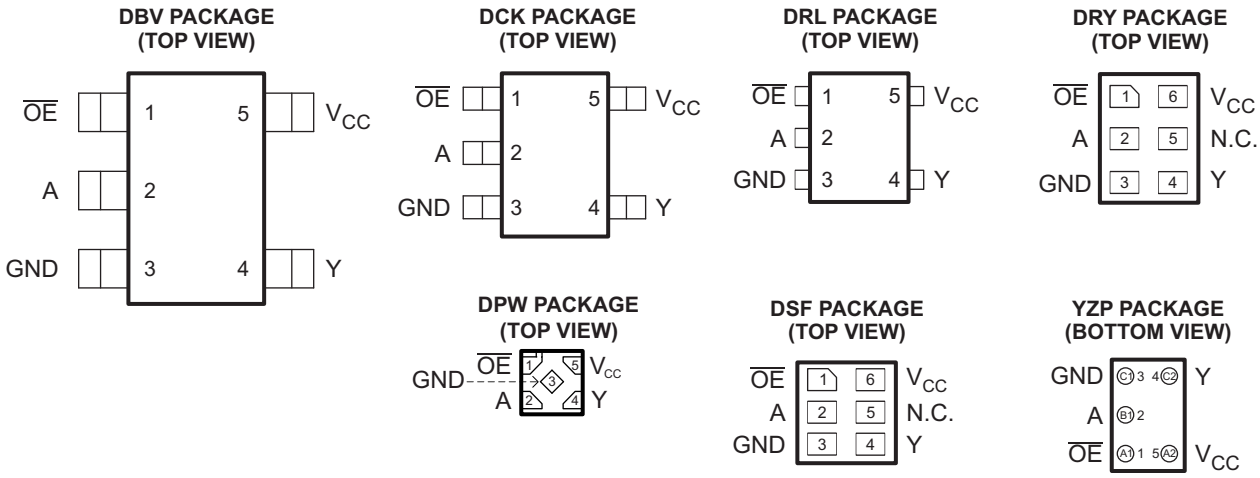

N.C. – No internal connection

See mechanical drawings for dimensions.

Pin Functions

PIN					DESCRIPTION
NAME	DRL, DCK, DBV	DRY, DSF	DPW	YZP	
$\overline{OE}$	1	1	1	A1	Input
A	2	2	2	B1	Input
GND	3	3	3	C1	Ground
Y	4	4	4	C2	Output
V_{CC}	5	6	5	A2	Power pin
NC	–	5	–	–	Not connected

7 Specifications

7.1 Absolute Maximum Ratings[1]

over operating free-air temperature range (unless otherwise noted)

			MIN	MAX	UNIT
V_{CC}	Supply voltage range		–0.5	6.5	V
V_I	Input voltage range[2]		–0.5	6.5	V
V_O	Voltage range applied to any output in the high-impedance or power-off state[2]		–0.5	6.5	V
V_O	Voltage range applied to any output in the high or low state[2][3]		–0.5	V_{CC} + 0.5	V
I_{IK}	Input clamp current	$V_I < 0$		–50	mA
I_{OK}	Output clamp current	$V_O < 0$		–50	mA
I_O	Continuous output current			±50	mA
	Continuous current through V_{CC} or GND			±100	mA

(1) Stresses beyond those listed under *Absolute Maximum Ratings* may cause permanent damage to the device. These are stress ratings only, and functional operation of the device at these or any other conditions beyond those indicated under *Recommended Operating* is not implied. Exposure to absolute-maximum-rated conditions for extended periods may affect device reliability.
(2) The input and output negative-voltage ratings may be exceeded if the input and output current ratings are observed.
(3) The value of V_{CC} is provided in the *Recommended Operating* table.

7.2 Handling Ratings

			MIN	MAX	UNIT
T_{stg}	Storage temperature range		–65	150	°C
$V_{(ESD)}$	Electrostatic discharge	Human body model (HBM), per ANSI/ESDA/JEDEC JS-001, all pins[1]	0	2000	V
		Charged device model (CDM), per JEDEC specification JESD22-C101, all pins[2]	0	1000	

(1) JEDEC document JEP155 states that 500-V HBM allows safe manufacturing with a standard ESD control process.
(2) JEDEC document JEP157 states that 250-V CDM allows safe manufacturing with a standard ESD control process.

Copyright © 1999–2014, Texas Instruments Incorporated

7.3 Recommended Operating Conditions[(1)]

			MIN	MAX	UNIT
V_{CC}	Supply voltage	Operating	1.65	5.5	V
		Data retention only	1.5		
V_{IH}	High-level input voltage	V_{CC} = 1.65 V to 1.95 V	0.65 × V_{CC}		V
		V_{CC} = 2.3 V to 2.7 V	1.7		
		V_{CC} = 3 V to 3.6 V	2		
		V_{CC} = 4.5 V to 5.5 V	0.7 × V_{CC}		
V_{IL}	Low-level input voltage	V_{CC} = 1.65 V to 1.95 V		0.35 × V_{CC}	V
		V_{CC} = 2.3 V to 2.7 V		0.7	
		V_{CC} = 3 V to 3.6 V		0.8	
		V_{CC} = 4.5 V to 5.5 V		0.3 × V_{CC}	
V_I	Input voltage		0	5.5	V
V_O	Output voltage		0	V_{CC}	V
I_{OH}	High-level output current	V_{CC} = 1.65 V		–4	mA
		V_{CC} = 2.3 V		–8	
		V_{CC} = 3 V		–16	
				–24	
		V_{CC} = 4.5 V		–32	
I_{OL}	Low-level output current	V_{CC} = 1.65 V		4	mA
		V_{CC} = 2.3 V		8	
		V_{CC} = 3 V		16	
				24	
		V_{CC} = 4.5 V		32	
Δt/Δv	Input transition rise or fall rate	V_{CC} = 1.8 V ± 0.15 V, 2.5 V ± 0.2 V		20	ns/V
		V_{CC} = 3.3 V ± 0.3 V		10	
		V_{CC} = 5 V ± 0.5 V		5	
T_A	Operating free-air temperature		–40	125	°C

(1) All unused inputs of the device must be held at V_{CC} or GND to ensure proper device operation. Refer to the TI application report, *Implications of Slow or Floating CMOS Inputs*, literature number SCBA004.

7.4 Thermal Information

THERMAL METRIC[(1)]		SN74LVC1G125						UNIT
		DBV	DCK	DRL	DRY	YZP	DPW	
		5 PINS	5 PINS	5 PINS	6 PINS	5 PINS	4 PINS	
$R_{\theta JA}$	Junction-to-ambient thermal resistance	229	278	243	439	130	340	°C/W
$R_{\theta JC(top)}$	Junction-to-case (top) thermal resistance	164	93	78	277	54	215	
$R_{\theta JB}$	Junction-to-board thermal resistance	62	65	78	271	51	294	
ψ_{JT}	Junction-to-top characterization parameter	44	2	10	84	1	41	
ψ_{JB}	Junction-to-board characterization parameter	62	64	77	271	50	294	
$R_{\theta JC(bot)}$	Junction-to-case (bottom) thermal resistance	–	–	–	–	–	250	

(1) For more information about traditional and new thermal metrics, see the *IC Package Thermal Metrics* application report, SPRA953.

Copyright © 1999–2014, Texas Instruments Incorporated

7.5 Electrical Characteristics

over recommended operating free-air temperature range (unless otherwise noted)

PARAMETER		TEST CONDITIONS	V_{CC}	–40 C to 85 °C			–40 C to 125 °C			UNIT
				MIN	TYP(1)	MAX	MIN	TYP(1)	MAX	
V_{OH}		I_{OH} = –100 µA	1.65 V to 5.5 V	V_{CC} – 0.1			V_{CC} – 0.1			V
		I_{OH} = –4 mA	1.65 V	1.2			1.2			
		I_{OH} = –8 mA	2.3 V	1.9			1.9			
		I_{OH} = –16 mA	3 V	2.4			2.4			
		I_{OH} = –24 mA		2.3			2.3			
		I_{OH} = –32 mA	4.5 V	3.8			3.8			
V_{OL}		I_{OL} = 100 µA	1.65 V to 5.5 V			0.1			0.1	V
		I_{OL} = 4 mA	1.65 V			0.45			0.45	
		I_{OL} = 8 mA	2.3 V			0.3			0.3	
		I_{OL} = 16 mA	3 V			0.4			0.4	
		I_{OL} = 24 mA				0.55			0.55	
		I_{OL} = 32 mA	4.5 V			0.55			0.55	
I_I	A or $\overline{OE}$ inputs	V_I = 5.5 V or GND	0 to 5.5 V			±5			±5	µA
I_{off}		V_I or V_O = 5.5 V	0			±10			±10	µA
I_{OZ}		V_O = 0 to 5.5 V	3.6 V			10			10	µA
I_{CC}		V_I = 5.5 V or GND, I_O = 0	1.65 V to 5.5 V			10			10	µA
ΔI_{CC}		One input at V_{CC} – 0.6 V, Other inputs at V_{CC} or GND	3 V to 5.5 V			500			500	µA
C_I		V_I = V_{CC} or GND	3.3 V		4			4		pF

(1) All typical values are at V_{CC} = 3.3 V, T_A = 25°C.

7.6 Switching Characteristics, C_L = 15 pF

over recommended operating free-air temperature range of –40°C to 85°C, C_L = 15 pF (unless otherwise noted) (see Figure 3)

PARAMETER	FROM (INPUT)	TO (OUTPUT)	V_{CC} = 1.8 V ± 0.15 V		V_{CC} = 2.5 V ± 0.2 V		V_{CC} = 3.3 V ± 0.3 V		V_{CC} = 5 V ± 0.5 V		UNIT
			MIN	MAX	MIN	MAX	MIN	MAX	MIN	MAX	
t_{pd}	A	Y	1.9	6.9	0.7	4.6	0.6	3.7	0.5	3.4	ns

7.7 Switching Characteristics, –40°C to 85°C

over recommended operating free-air temperature range –40°C to 85°C, C_L = 30 pF or 50 pF (unless otherwise noted) (see Figure 4)

PARAMETER	FROM (INPUT)	TO (OUTPUT)	V_{CC} = 1.8 V ± 0.15 V		V_{CC} = 2.5 V ± 0.2 V		V_{CC} = 3.3 V ± 0.3 V		V_{CC} = 5 V ± 0.5 V		UNIT
			MIN	MAX	MIN	MAX	MIN	MAX	MIN	MAX	
t_{pd}	A	Y	2.8	9	1.2	5.5	1	4.5	1	4	ns
t_{en}	$\overline{OE}$	Y	3.3	10.1	1.5	6.6	1	5.3	1	5	ns
t_{dis}	$\overline{OE}$	Y	1.3	9.2	1	5	1	5	1	4.2	ns

Copyright © 1999–2014, Texas Instruments Incorporated

7.8 Switching Characteristics, –40°C to 125°C

over recommended operating free-air temperature range –40°C to 125°C, C_L = 30 pF or 50 pF (unless otherwise noted) (see Figure 4)

PARAMETER	FROM (INPUT)	TO (OUTPUT)	V_{CC} = 1.8 V ± 0.15 V		V_{CC} = 2.5 V ± 0.2 V		V_{CC} = 3.3 V ± 0.3 V		V_{CC} = 5 V ± 0.5 V		UNIT
			MIN	MAX	MIN	MAX	MIN	MAX	MIN	MAX	
t_{pd}	A	Y	2.8	9.3	1.2	5.8	1	4.7	1	4.2	ns
t_{en}	$\overline{OE}$	Y	3.3	10.4	1.5	6.9	1	5.6	1	5.2	ns
t_{dis}	$\overline{OE}$	Y	1.3	9.3	1	5.2	1	5.2	1	4.4	ns

7.9 Operating Characteristics

T_A = 25°C

PARAMETER			TEST CONDITIONS	V_{CC} = 1.8 V	V_{CC} = 2.5 V	V_{CC} = 3.3 V	V_{CC} = 5 V	UNIT
				TYP	TYP	TYP	TYP	
C_{pd}	Power dissipation capacitance	Outputs enabled	f = 10 MHz	18	18	19	21	pF
		Outputs disabled		2	2	2	4	

7.10 Typical Characteristics

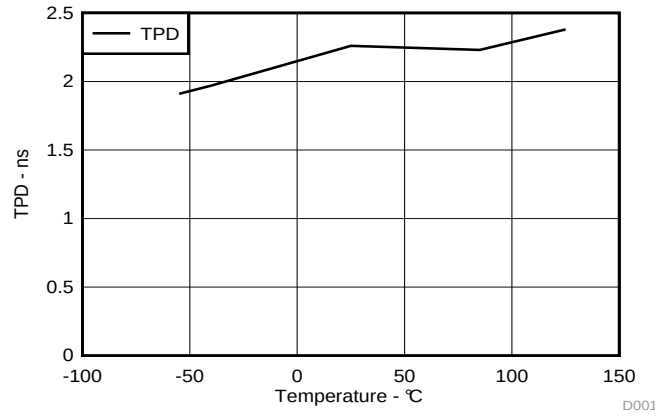

Figure 1. TPD Across Temperature at 3.3 V V_{CC}

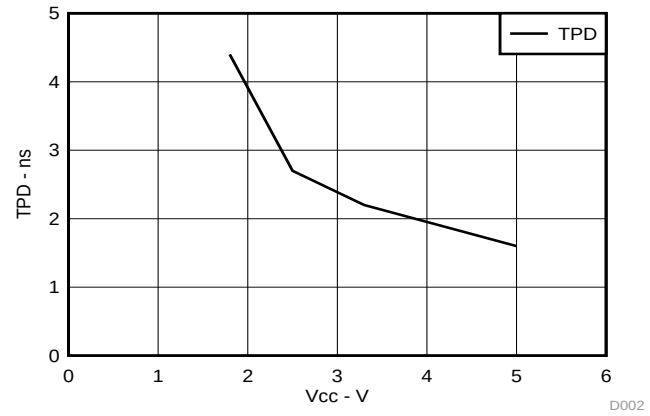

Figure 2. TPD Across V_{CC} at 25°C

8 Parameter Measurement Information

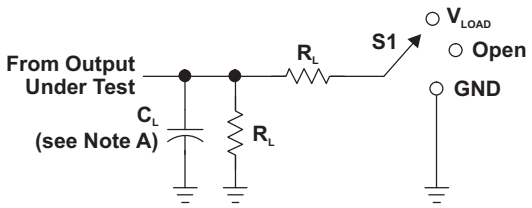

LOAD CIRCUIT

TEST	S1
t_{PLH}/t_{PHL}	Open
t_{PLZ}/t_{PZL}	V_{LOAD}
t_{PHZ}/t_{PZH}	GND

V_{CC}	INPUTS		V_M	V_{LOAD}	C_L	R_L	V_Δ
	V_I	t_r/t_f					
1.8 V ± 0.15 V	V_{CC}	≤2 ns	$V_{CC}/2$	2 × V_{CC}	15 pF	1 MΩ	0.15 V
2.5 V ± 0.2 V	V_{CC}	≤2 ns	$V_{CC}/2$	2 × V_{CC}	15 pF	1 MΩ	0.15 V
3.3 V ± 0.3 V	3 V	≤2.5 ns	1.5 V	6 V	15 pF	1 MΩ	0.3 V
5 V ± 0.5 V	V_{CC}	≤2.5 ns	$V_{CC}/2$	2 × V_{CC}	15 pF	1 MΩ	0.3 V

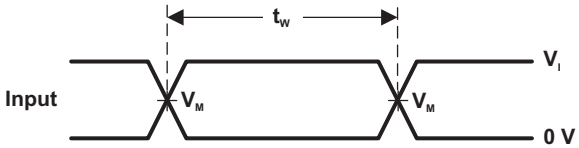

VOLTAGE WAVEFORMS
PULSE DURATION

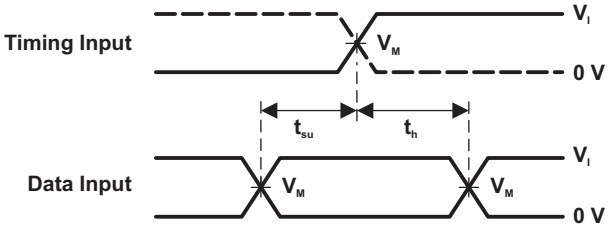

VOLTAGE WAVEFORMS
SETUP AND HOLD TIMES

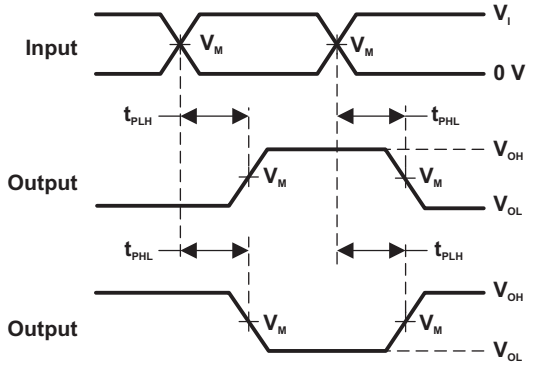

VOLTAGE WAVEFORMS
PROPAGATION DELAY TIMES
INVERTING AND NONINVERTING OUTPUTS

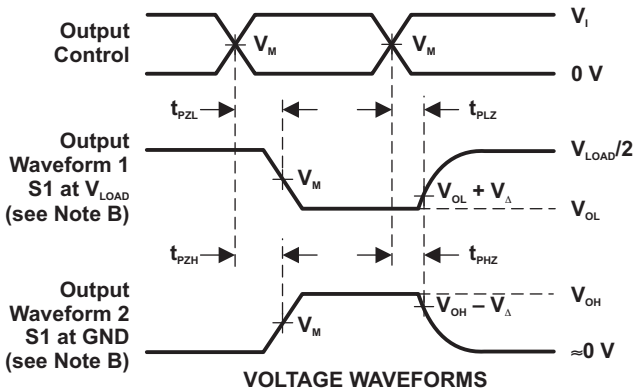

VOLTAGE WAVEFORMS
ENABLE AND DISABLE TIMES
LOW- AND HIGH-LEVEL ENABLING

NOTES: A. C_L includes probe and jig capacitance.
B. Waveform 1 is for an output with internal conditions such that the output is low, except when disabled by the output control. Waveform 2 is for an output with internal conditions such that the output is high, except when disabled by the output control.
C. All input pulses are supplied by generators having the following characteristics: PRR ≤ 10 MHz, Z_O = 50 Ω.
D. The outputs are measured one at a time, with one transition per measurement.
E. t_{PLZ} and t_{PHZ} are the same as t_{dis}.
F. t_{PZL} and t_{PZH} are the same as t_{en}.
G. t_{PLH} and t_{PHL} are the same as t_{pd}.
H. All parameters and waveforms are not applicable to all devices.

Figure 3. Load Circuit and Voltage Waveforms

Copyright © 1999–2014, Texas Instruments Incorporated

Parameter Measurement Information (continued)

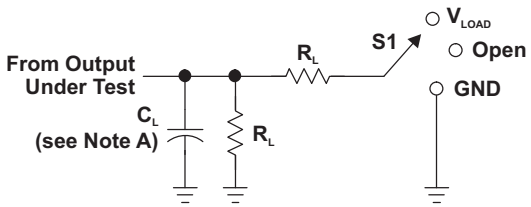

LOAD CIRCUIT

TEST	S1
t_{PLH}/t_{PHL}	Open
t_{PLZ}/t_{PZL}	V_{LOAD}
t_{PHZ}/t_{PZH}	GND

V_{CC}	INPUTS		V_M	V_{LOAD}	C_L	R_L	V_Δ
	V_I	t_r/t_f					
1.8 V ± 0.15 V	V_{CC}	≤2 ns	$V_{CC}/2$	2 × V_{CC}	30 pF	1 kΩ	0.15 V
2.5 V ± 0.2 V	V_{CC}	≤2 ns	$V_{CC}/2$	2 × V_{CC}	30 pF	500 Ω	0.15 V
3.3 V ± 0.3 V	3 V	≤2.5 ns	1.5 V	6 V	50 pF	500 Ω	0.3 V
5 V ± 0.5 V	V_{CC}	≤2.5 ns	$V_{CC}/2$	2 × V_{CC}	50 pF	500 Ω	0.3 V

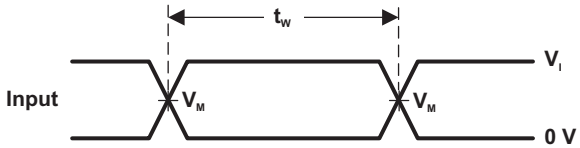

VOLTAGE WAVEFORMS
PULSE DURATION

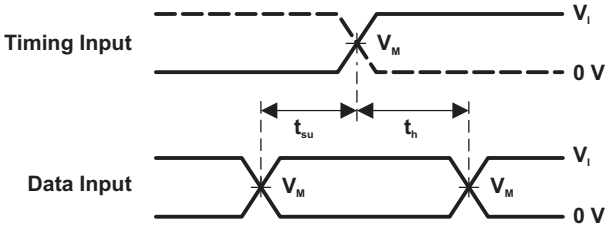

VOLTAGE WAVEFORMS
SETUP AND HOLD TIMES

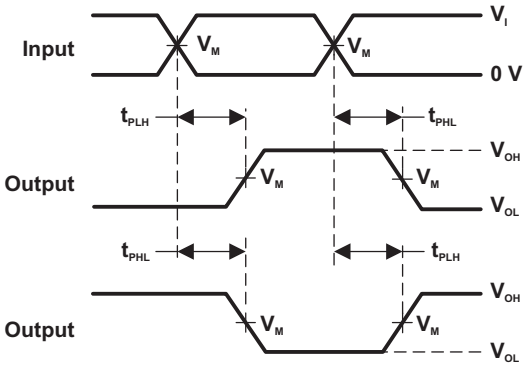

VOLTAGE WAVEFORMS
PROPAGATION DELAY TIMES
INVERTING AND NONINVERTING OUTPUTS

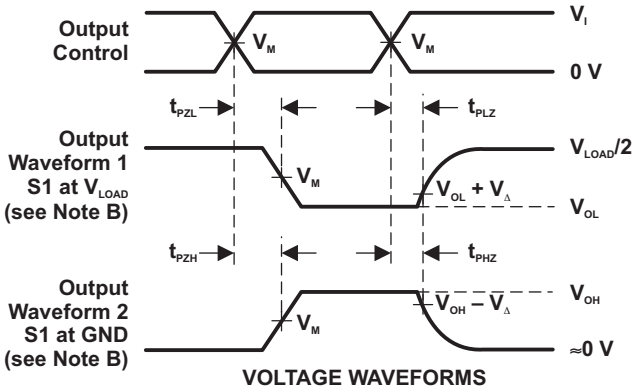

VOLTAGE WAVEFORMS
ENABLE AND DISABLE TIMES
LOW- AND HIGH-LEVEL ENABLING

NOTES:
A. C_L includes probe and jig capacitance.
B. Waveform 1 is for an output with internal conditions such that the output is low, except when disabled by the output control. Waveform 2 is for an output with internal conditions such that the output is high, except when disabled by the output control.
C. All input pulses are supplied by generators having the following characteristics: PRR ≤ 10 MHz, Z_O = 50 Ω.
D. The outputs are measured one at a time, with one transition per measurement.
E. t_{PLZ} and t_{PHZ} are the same as t_{dis}.
F. t_{PZL} and t_{PZH} are the same as t_{en}.
G. t_{PLH} and t_{PHL} are the same as t_{pd}.
H. All parameters and waveforms are not applicable to all devices.

Figure 4. Load Circuit and Voltage Waveforms

9 Detailed Description

9.1 Overview

The SN74LVC1G125 device contains one buffer gate device with output enable control and performs the Boolean function Y = A. This device is fully specified for partial-power-down applications using I_{off}. The I_{off} circuitry disables the outputs, preventing damaging current backflow through the device when it is powered down.

To ensure the high-impedance state during power up or power down, $\overline{OE}$ should be tied to V_{CC} through a pullup resistor; the minimum value of the resistor is determined by the current-sinking capability of the driver.

The DPW package technology is a major breakthrough in IC packaging. Its tiny 0.64 mm square footprint saves significant board space over other package options while still retaining the traditional manufacturing friendly lead pitch of 0.5 mm.

9.2 Functional Block Diagram

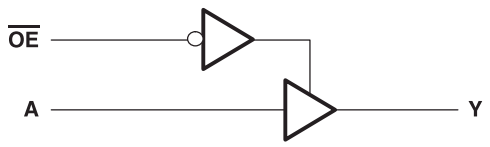

9.3 Feature Description

- Wide operating voltage range
  - Operates from 1.65 V to 5.5 V
- Allows down voltage translation
- Inputs accept voltages to 5.5 V
- I_{off} feature allows voltages on the inputs and outputs, when V_{CC} is 0 V

9.4 Device Functional Modes

Table 1. Function Table

INPUTS		OUTPUT
$\overline{OE}$	A	Y
L	H	H
L	L	L
H	X	Z

Copyright © 1999–2014, Texas Instruments Incorporated

10 Application and Implementation

10.1 Application Information

The SN74LVC1G125 device is a high drive CMOS device that can be used as a output enabled buffer with a high output drive, such as an LED application. It can produce 24 mA of drive current at 3.3 V making it Ideal for driving multiple outputs and good for high speed applications up to 100 MHz. The inputs are 5.5 V tolerant allowing it to translate down to V_{CC}.

10.2 Typical Application

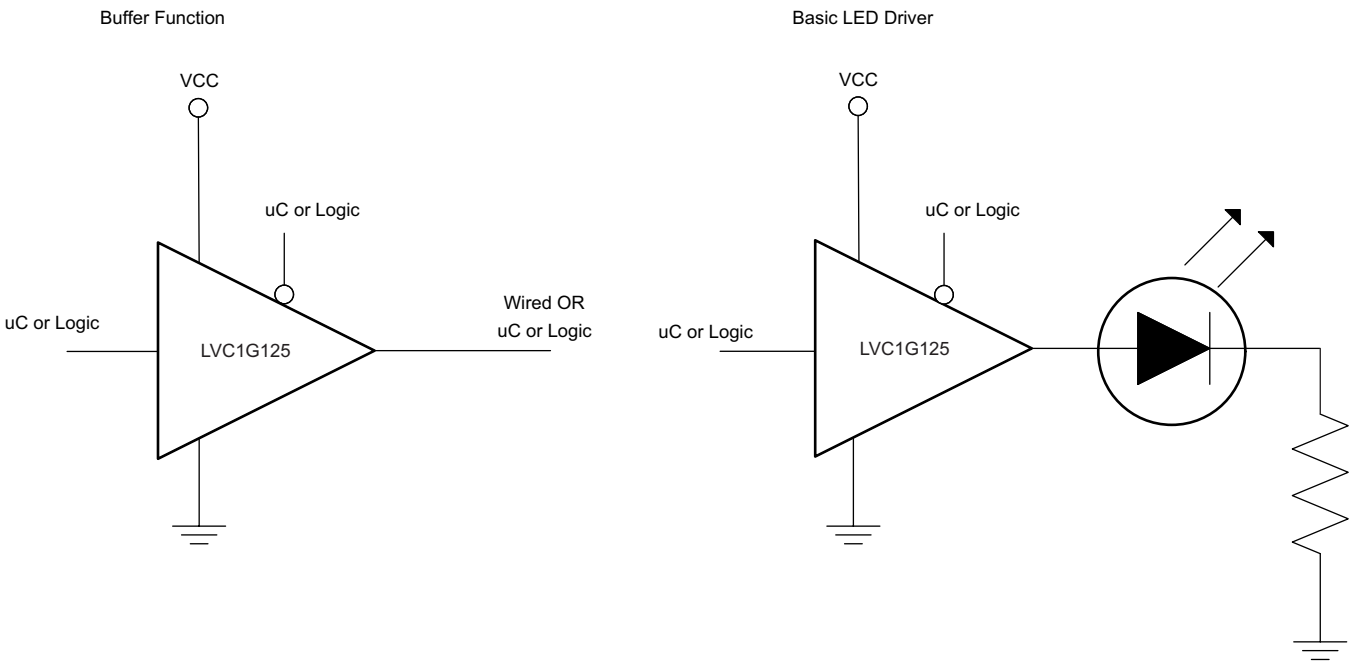

Figure 5. Application Schematic

10.2.1 Design Requirements

This device uses CMOS technology and has balanced output drive. Care should be taken to avoid bus contention because it can drive currents that would exceed maximum limits. The high drive will also create fast edges into light loads so routing and load conditions should be considered to prevent ringing.

10.2.2 Detailed Design Procedure

1. Recommended Input Conditions
   - Rise time and fall time specs. See (Δt/ΔV) in the *Recommended Operating Conditions* table.
   - Specified high and low levels. See (V_{IH} and V_{IL}) in the *Recommended Operating Conditions* table.
   - Inputs are overvoltage tolerant allowing them to go as high as (V_I max) in the *Recommended Operating Conditions* table at any valid V_{CC}.
2. Recommend Output Conditions
   - Load currents should not exceed (I_O max) per output and should not exceed (Continuous current through V_{CC} or GND) total current for the part. These limits are located in the *Absolute Maximum Ratings* table.
   - Outputs should not be pulled above V_{CC}.

Typical Application (continued)

10.2.3 Application Curves

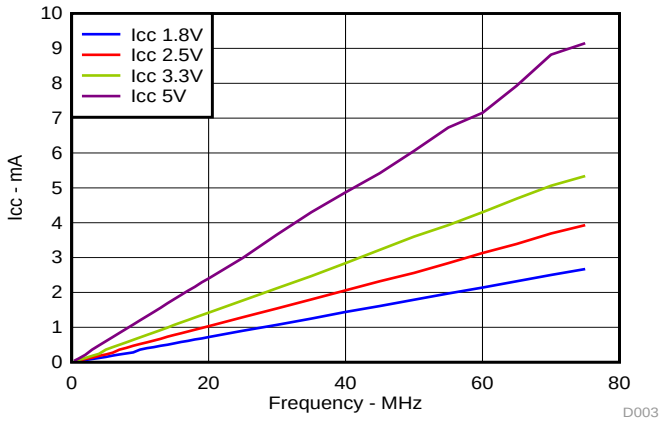

Figure 6. I_{CC} vs Frequency

11 Power Supply Recommendations

The power supply can be any voltage between the min and max supply voltage rating located in the *Recommended Operating Conditions* table.

Each VCC pin should have a good bypass capacitor to prevent power disturbance. For devices with a single supply a 0.1-μF capacitor is recommended and if there are multiple VCC pins then a 0.01-μF or 0.022-μF capacitor is recommended for each power pin. It is ok to parallel multiple bypass caps to reject different frequencies of noise. 0.1-μF and 1-μF capacitors are commonly used in parallel. The bypass capacitor should be installed as close to the power pin as possible for best results.

12 Layout

12.1 Layout Guidelines

When using multiple bit logic devices inputs should not ever float. In many cases, functions or parts of functions of digital logic devices are unused; for example, when only two inputs of a triple-input AND gate are used or only 3 of the 4 buffer gates are used. Such input pins should not be left unconnected because the undefined voltages at the outside connections result in undefined operational states. Figure 7 shows the rules that must be observed under all circumstances. All unused inputs of digital logic devices must be connected to a high or low bias to prevent them from floating. The logic level that should be applied to any particular unused input depends on the function of the device. Generally they will be tied to GND or VCC, whichever makes more sense or is more convenient.

12.2 Layout Example

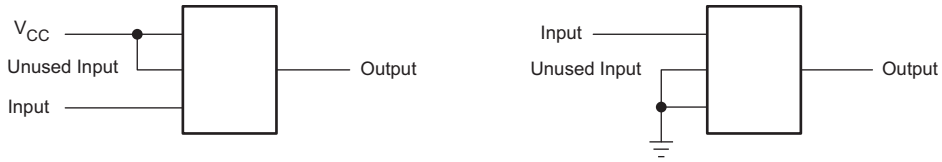

Figure 7. Package Layout

Copyright © 1999–2014, Texas Instruments Incorporated

13 Device and Documentation Support

13.1 Trademarks

All trademarks are the property of their respective owners.

13.2 Electrostatic Discharge Caution

These devices have limited built-in ESD protection. The leads should be shorted together or the device placed in conductive foam during storage or handling to prevent electrostatic damage to the MOS gates.

13.3 Glossary

SLYZ022 — *TI Glossary*.

This glossary lists and explains terms, acronyms, and definitions.

14 Mechanical, Packaging, and Orderable Information

The following pages include mechanical packaging and orderable information. This information is the most current data available for the designated devices. This data is subject to change without notice and revision of this document. For browser-based versions of this data sheet, refer to the left-hand navigation.

PACKAGING INFORMATION

Orderable Device	Status (1)	Package Type	Package Drawing	Pins	Package Qty	Eco Plan (2)	Lead finish/ Ball material (6)	MSL Peak Temp (3)	Op Temp (°C)	Device Marking (4/5)	Samples
74LVC1G125DBVRE4	ACTIVE	SOT-23	DBV	5	3000	RoHS & Green	NIPDAU	Level-1-260C-UNLIM	-40 to 125	(C255, C25F, C25J, C25K, C25R, C 25T)	Samples
74LVC1G125DBVRG4	ACTIVE	SOT-23	DBV	5	3000	RoHS & Green	NIPDAU	Level-1-260C-UNLIM	-40 to 125	(C255, C25F, C25J, C25K, C25R, C 25T)	Samples
74LVC1G125DBVTG4	ACTIVE	SOT-23	DBV	5	250	RoHS & Green	NIPDAU	Level-1-260C-UNLIM	-40 to 125	(C255, C25F, C25K, C25R)	Samples
74LVC1G125DCKRE4	ACTIVE	SC70	DCK	5	3000	RoHS & Green	NIPDAU	Level-1-260C-UNLIM	-40 to 125	CM5	Samples
74LVC1G125DCKRG4	ACTIVE	SC70	DCK	5	3000	RoHS & Green	NIPDAU	Level-1-260C-UNLIM	-40 to 125	CM5	Samples
74LVC1G125DCKTE4	ACTIVE	SC70	DCK	5	250	RoHS & Green	NIPDAU	Level-1-260C-UNLIM	-40 to 125	CM5	Samples
74LVC1G125DCKTG4	ACTIVE	SC70	DCK	5	250	RoHS & Green	NIPDAU	Level-1-260C-UNLIM	-40 to 125	CM5	Samples
74LVC1G125DRLRG4	ACTIVE	SOT-5X3	DRL	5	4000	RoHS & Green	NIPDAUAG	Level-1-260C-UNLIM	-40 to 125	(CM7, CMR)	Samples
SN74LVC1G125DBVR	ACTIVE	SOT-23	DBV	5	3000	RoHS & Green	NIPDAU | SN	Level-1-260C-UNLIM	-40 to 125	(C255, C25F, C25J, C25K, C25R, C 25T)	Samples
SN74LVC1G125DBVT	ACTIVE	SOT-23	DBV	5	250	RoHS & Green	NIPDAU	Level-1-260C-UNLIM	-40 to 125	(C255, C25F, C25K, C25R)	Samples
SN74LVC1G125DCK3	ACTIVE	SC70	DCK	5	3000	RoHS & Non-Green	SNBI	Level-1-260C-UNLIM	-40 to 85	(CMF, CMZ)	Samples
SN74LVC1G125DCKJ	ACTIVE	SC70	DCK	5	10000	RoHS & Green	NIPDAU	Level-1-260C-UNLIM	-40 to 125	CM5	Samples
SN74LVC1G125DCKR	ACTIVE	SC70	DCK	5	3000	RoHS & Green	NIPDAU | SN	Level-1-260C-UNLIM	-40 to 125	(CM5, CMF, CMJ, CM K, CMR, CMT)	Samples
SN74LVC1G125DCKT	ACTIVE	SC70	DCK	5	250	RoHS & Green	NIPDAU | SN	Level-1-260C-UNLIM	-40 to 125	(CM5, CMF, CMJ, CM K, CMR, CMT)	Samples
SN74LVC1G125DPWR	ACTIVE	X2SON	DPW	5	3000	RoHS & Green	NIPDAU	Level-1-260C-UNLIM	-40 to 125	R4	Samples
SN74LVC1G125DRLR	ACTIVE	SOT-5X3	DRL	5	4000	RoHS & Green	NIPDAU | NIPDAUAG	Level-1-260C-UNLIM	-40 to 125	(CM7, CMR)	Samples
SN74LVC1G125DRYR	ACTIVE	SON	DRY	6	5000	RoHS & Green	NIPDAU	Level-1-260C-UNLIM	-40 to 125	(CM, DM)	Samples

Orderable Device	Status (1)	Package Type	Package Drawing	Pins	Package Qty	Eco Plan (2)	Lead finish/ Ball material (6)	MSL Peak Temp (3)	Op Temp (°C)	Device Marking (4/5)	Samples
SN74LVC1G125DSFR	ACTIVE	SON	DSF	6	5000	RoHS & Green	NIPDAU	Level-1-260C-UNLIM	-40 to 125	CM	Samples
SN74LVC1G125YZPR	ACTIVE	DSBGA	YZP	5	3000	RoHS & Green	SNAGCU	Level-1-260C-UNLIM	-40 to 125	(CM7, CMN)	Samples

(1) The marketing status values are defined as follows:
ACTIVE: Product device recommended for new designs.
LIFEBUY: TI has announced that the device will be discontinued, and a lifetime-buy period is in effect.
NRND: Not recommended for new designs. Device is in production to support existing customers, but TI does not recommend using this part in a new design.
PREVIEW: Device has been announced but is not in production. Samples may or may not be available.
OBSOLETE: TI has discontinued the production of the device.

(2) **RoHS:** TI defines "RoHS" to mean semiconductor products that are compliant with the current EU RoHS requirements for all 10 RoHS substances, including the requirement that RoHS substance do not exceed 0.1% by weight in homogeneous materials. Where designed to be soldered at high temperatures, "RoHS" products are suitable for use in specified lead-free processes. TI may reference these types of products as "Pb-Free".
RoHS Exempt: TI defines "RoHS Exempt" to mean products that contain lead but are compliant with EU RoHS pursuant to a specific EU RoHS exemption.
Green: TI defines "Green" to mean the content of Chlorine (Cl) and Bromine (Br) based flame retardants meet JS709B low halogen requirements of <=1000ppm threshold. Antimony trioxide based flame retardants must also meet the <=1000ppm threshold requirement.

(3) MSL, Peak Temp. - The Moisture Sensitivity Level rating according to the JEDEC industry standard classifications, and peak solder temperature.

(4) There may be additional marking, which relates to the logo, the lot trace code information, or the environmental category on the device.

(5) Multiple Device Markings will be inside parentheses. Only one Device Marking contained in parentheses and separated by a "~" will appear on a device. If a line is indented then it is a continuation of the previous line and the two combined represent the entire Device Marking for that device.

(6) Lead finish/Ball material - Orderable Devices may have multiple material finish options. Finish options are separated by a vertical ruled line. Lead finish/Ball material values may wrap to two lines if the finish value exceeds the maximum column width.

Important Information and Disclaimer: The information provided on this page represents TI's knowledge and belief as of the date that it is provided. TI bases its knowledge and belief on information provided by third parties, and makes no representation or warranty as to the accuracy of such information. Efforts are underway to better integrate information from third parties. TI has taken and continues to take reasonable steps to provide representative and accurate information but may not have conducted destructive testing or chemical analysis on incoming materials and chemicals. TI and TI suppliers consider certain information to be proprietary, and thus CAS numbers and other limited information may not be available for release.

In no event shall TI's liability arising out of such information exceed the total purchase price of the TI part(s) at issue in this document sold by TI to Customer on an annual basis.

OTHER QUALIFIED VERSIONS OF SN74LVC1G125 :

- Automotive: SN74LVC1G125-Q1
- Enhanced Product: SN74LVC1G125-EP

NOTE: Qualified Version Definitions:

- Automotive - Q100 devices qualified for high-reliability automotive applications targeting zero defects
- Enhanced Product - Supports Defense, Aerospace and Medical Applications

TAPE AND REEL INFORMATION

REEL DIMENSIONS

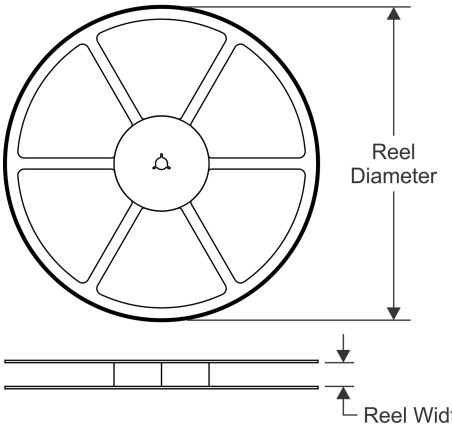

TAPE DIMENSIONS

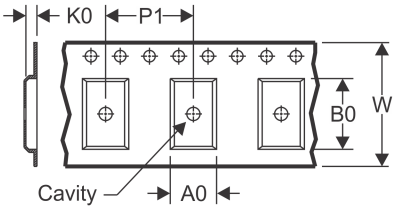

A0	Dimension designed to accommodate the component width
B0	Dimension designed to accommodate the component length
K0	Dimension designed to accommodate the component thickness
W	Overall width of the carrier tape
P1	Pitch between successive cavity centers

QUADRANT ASSIGNMENTS FOR PIN 1 ORIENTATION IN TAPE

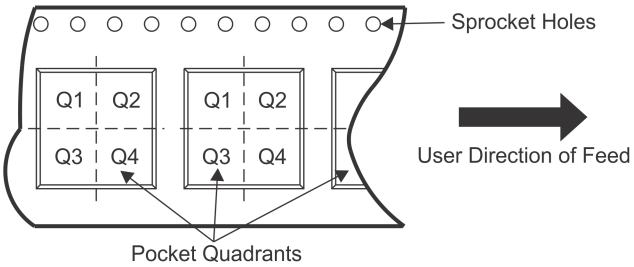

*All dimensions are nominal

Device	Package Type	Package Drawing	Pins	SPQ	Reel Diameter (mm)	Reel Width W1 (mm)	A0 (mm)	B0 (mm)	K0 (mm)	P1 (mm)	W (mm)	Pin1 Quadrant
74LVC1G125DCKRG4	SC70	DCK	5	3000	178.0	9.2	2.4	2.4	1.22	4.0	8.0	Q3
74LVC1G125DCKTG4	SC70	DCK	5	250	178.0	9.2	2.4	2.4	1.22	4.0	8.0	Q3
SN74LVC1G125DBVR	SOT-23	DBV	5	3000	178.0	9.2	3.3	3.23	1.55	4.0	8.0	Q3
SN74LVC1G125DBVR	SOT-23	DBV	5	3000	180.0	8.4	3.23	3.17	1.37	4.0	8.0	Q3
SN74LVC1G125DBVR	SOT-23	DBV	5	3000	178.0	9.0	3.23	3.17	1.37	4.0	8.0	Q3
SN74LVC1G125DBVT	SOT-23	DBV	5	250	178.0	9.2	3.3	3.23	1.55	4.0	8.0	Q3
SN74LVC1G125DBVT	SOT-23	DBV	5	250	180.0	8.4	3.23	3.17	1.37	4.0	8.0	Q3
SN74LVC1G125DCKR	SC70	DCK	5	3000	180.0	8.4	2.47	2.3	1.25	4.0	8.0	Q3
SN74LVC1G125DCKR	SC70	DCK	5	3000	178.0	9.0	2.4	2.5	1.2	4.0	8.0	Q3
SN74LVC1G125DCKR	SC70	DCK	5	3000	178.0	9.2	2.4	2.4	1.22	4.0	8.0	Q3
SN74LVC1G125DCKT	SC70	DCK	5	250	178.0	9.0	2.4	2.5	1.2	4.0	8.0	Q3
SN74LVC1G125DCKT	SC70	DCK	5	250	178.0	9.2	2.4	2.4	1.22	4.0	8.0	Q3
SN74LVC1G125DCKT	SC70	DCK	5	250	180.0	8.4	2.47	2.3	1.25	4.0	8.0	Q3
SN74LVC1G125DPWR	X2SON	DPW	5	3000	178.0	8.4	0.91	0.91	0.5	2.0	8.0	Q3
SN74LVC1G125DRLR	SOT-5X3	DRL	5	4000	180.0	8.4	1.98	1.78	0.69	4.0	8.0	Q3
SN74LVC1G125DRYR	SON	DRY	6	5000	180.0	9.5	1.15	1.6	0.75	4.0	8.0	Q1
SN74LVC1G125DRYR	SON	DRY	6	5000	180.0	8.4	1.2	1.65	0.69	4.0	8.0	Q1
SN74LVC1G125DSFR	SON	DSF	6	5000	180.0	9.5	1.16	1.16	0.5	4.0	8.0	Q2

Device	Package Type	Package Drawing	Pins	SPQ	Reel Diameter (mm)	Reel Width W1 (mm)	A0 (mm)	B0 (mm)	K0 (mm)	P1 (mm)	W (mm)	Pin1 Quadrant
SN74LVC1G125YZPR	DSBGA	YZP	5	3000	178.0	9.2	1.02	1.52	0.63	4.0	8.0	Q1

TAPE AND REEL BOX DIMENSIONS

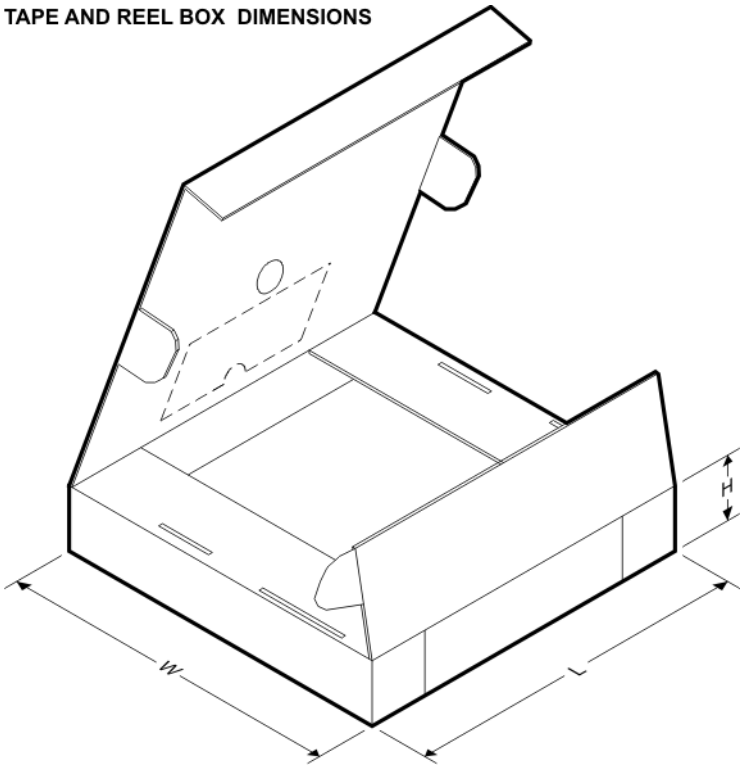

*All dimensions are nominal

Device	Package Type	Package Drawing	Pins	SPQ	Length (mm)	Width (mm)	Height (mm)
74LVC1G125DCKRG4	SC70	DCK	5	3000	180.0	180.0	18.0
74LVC1G125DCKTG4	SC70	DCK	5	250	180.0	180.0	18.0
SN74LVC1G125DBVR	SOT-23	DBV	5	3000	180.0	180.0	18.0
SN74LVC1G125DBVR	SOT-23	DBV	5	3000	202.0	201.0	28.0
SN74LVC1G125DBVR	SOT-23	DBV	5	3000	180.0	180.0	18.0
SN74LVC1G125DBVT	SOT-23	DBV	5	250	180.0	180.0	18.0
SN74LVC1G125DBVT	SOT-23	DBV	5	250	202.0	201.0	28.0
SN74LVC1G125DCKR	SC70	DCK	5	3000	202.0	201.0	28.0
SN74LVC1G125DCKR	SC70	DCK	5	3000	180.0	180.0	18.0
SN74LVC1G125DCKR	SC70	DCK	5	3000	180.0	180.0	18.0
SN74LVC1G125DCKT	SC70	DCK	5	250	180.0	180.0	18.0
SN74LVC1G125DCKT	SC70	DCK	5	250	180.0	180.0	18.0
SN74LVC1G125DCKT	SC70	DCK	5	250	202.0	201.0	28.0
SN74LVC1G125DPWR	X2SON	DPW	5	3000	205.0	200.0	33.0
SN74LVC1G125DRLR	SOT-5X3	DRL	5	4000	202.0	201.0	28.0
SN74LVC1G125DRYR	SON	DRY	6	5000	184.0	184.0	19.0

Device	Package Type	Package Drawing	Pins	SPQ	Length (mm)	Width (mm)	Height (mm)
SN74LVC1G125DRYR	SON	DRY	6	5000	200.0	183.0	25.0
SN74LVC1G125DSFR	SON	DSF	6	5000	184.0	184.0	19.0
SN74LVC1G125YZPR	DSBGA	YZP	5	3000	220.0	220.0	35.0

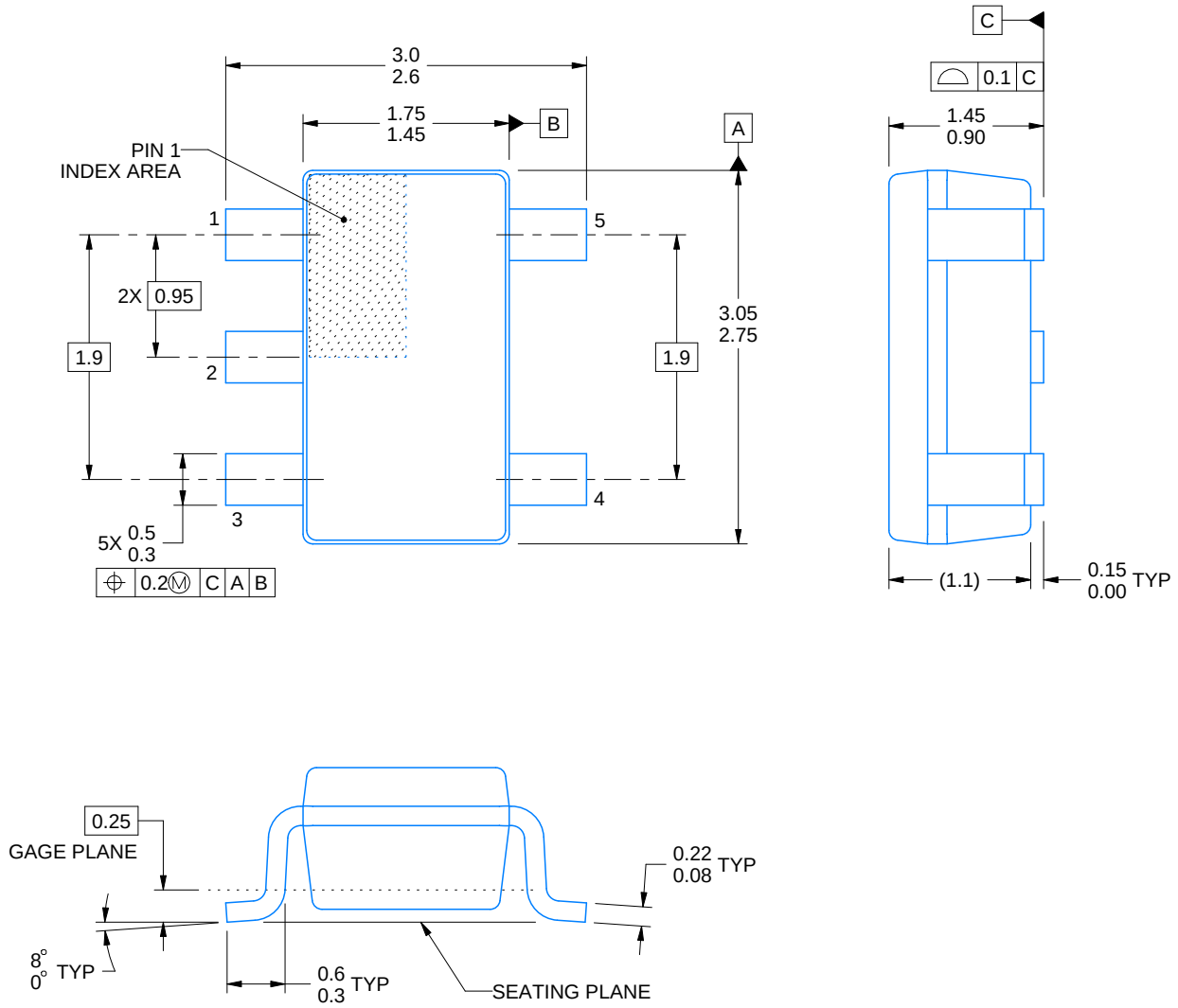

4214839/F 06/2021

NOTES:

1. All linear dimensions are in millimeters. Any dimensions in parenthesis are for reference only. Dimensioning and tolerancing per ASME Y14.5M.
2. This drawing is subject to change without notice.
3. Refernce JEDEC MO-178.
4. Body dimensions do not include mold flash, protrusions, or gate burrs. Mold flash, protrusions, or gate burrs shall not exceed 0.25 mm per side.

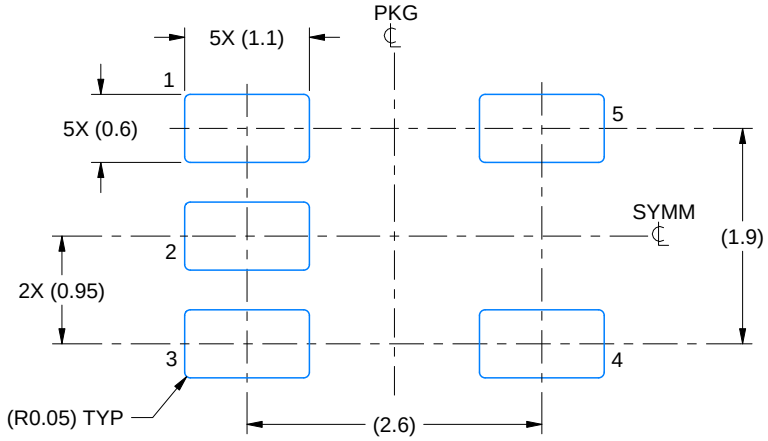

LAND PATTERN EXAMPLE
EXPOSED METAL SHOWN
SCALE:15X

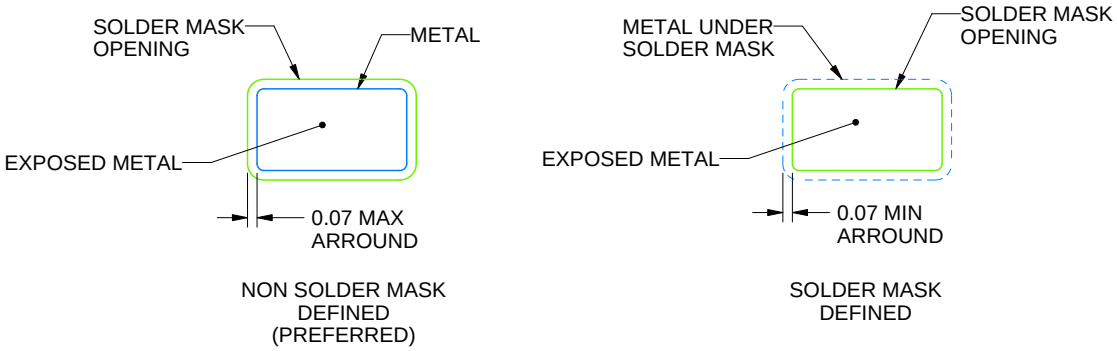

SOLDER MASK DETAILS

4214839/F 06/2021

NOTES: (continued)

5. Publication IPC-7351 may have alternate designs.
6. Solder mask tolerances between and around signal pads can vary based on board fabrication site.

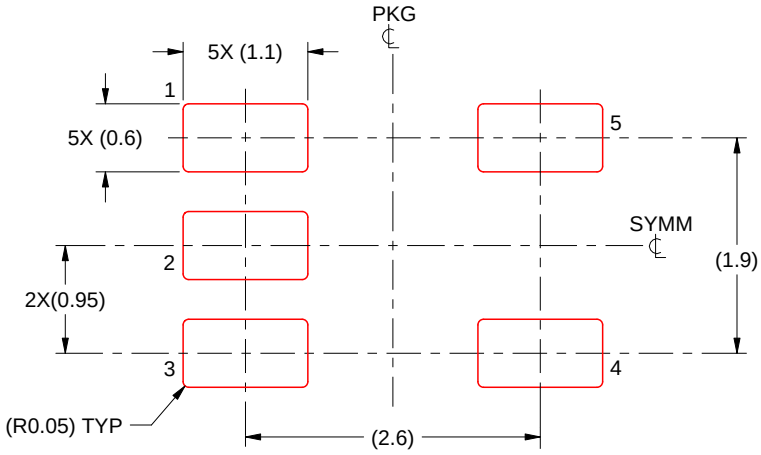

SOLDER PASTE EXAMPLE
BASED ON 0.125 mm THICK STENCIL
SCALE:15X

4214839/F 06/2021

NOTES: (continued)

7. Laser cutting apertures with trapezoidal walls and rounded corners may offer better paste release. IPC-7525 may have alternate design recommendations.
8. Board assembly site may have different recommendations for stencil design.

DPW 5 X2SON - 0.4 mm max height

PLASTIC SMALL OUTLINE - NO LEAD

Images above are just a representation of the package family, actual package may vary.
Refer to the product data sheet for package details.

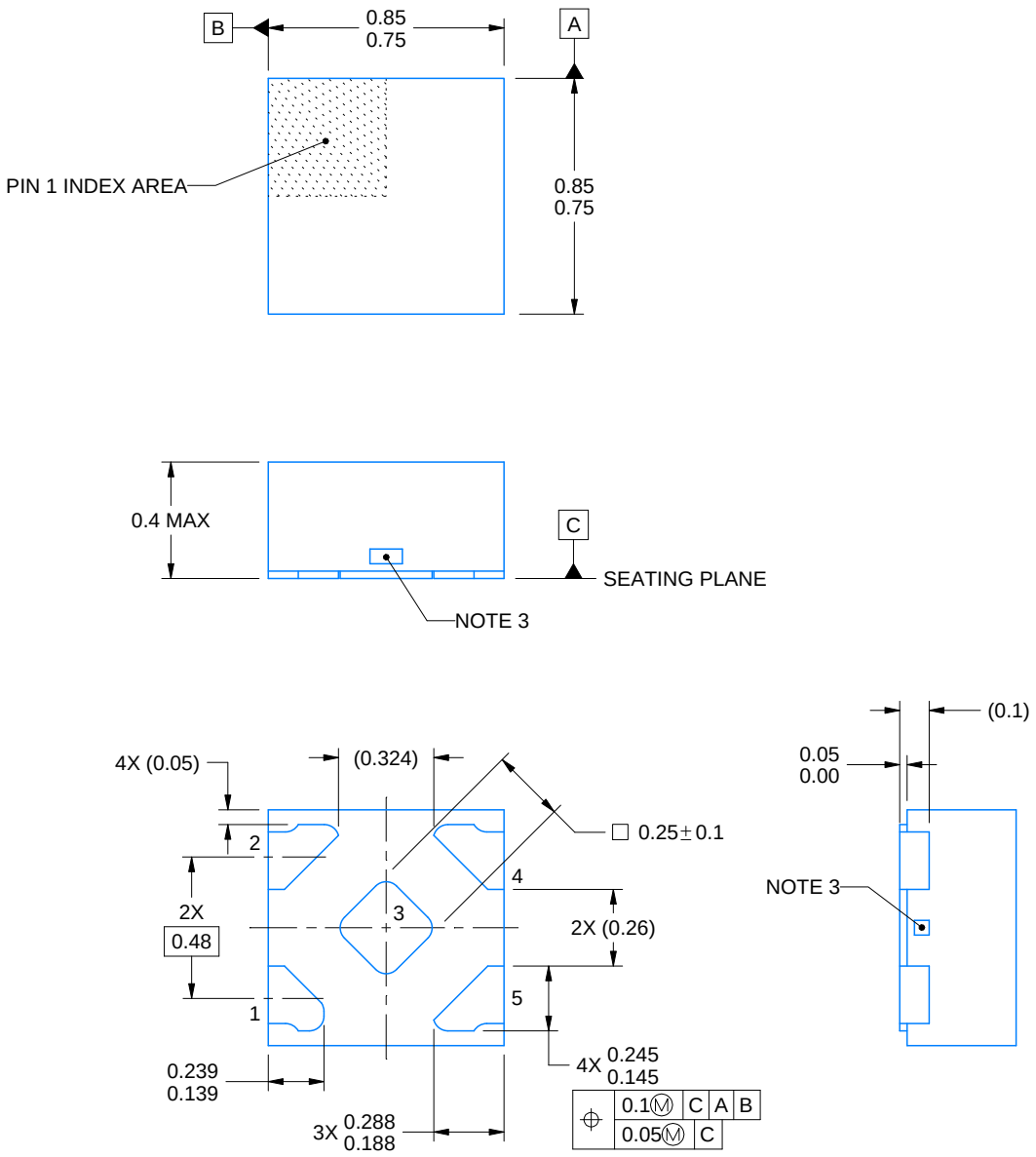

4223102/C 06/2021

NOTES:

1. All linear dimensions are in millimeters. Any dimensions in parenthesis are for reference only. Dimensioning and tolerancing per ASME Y14.5M.
2. This drawing is subject to change without notice.
3. The size and shape of this feature may vary.

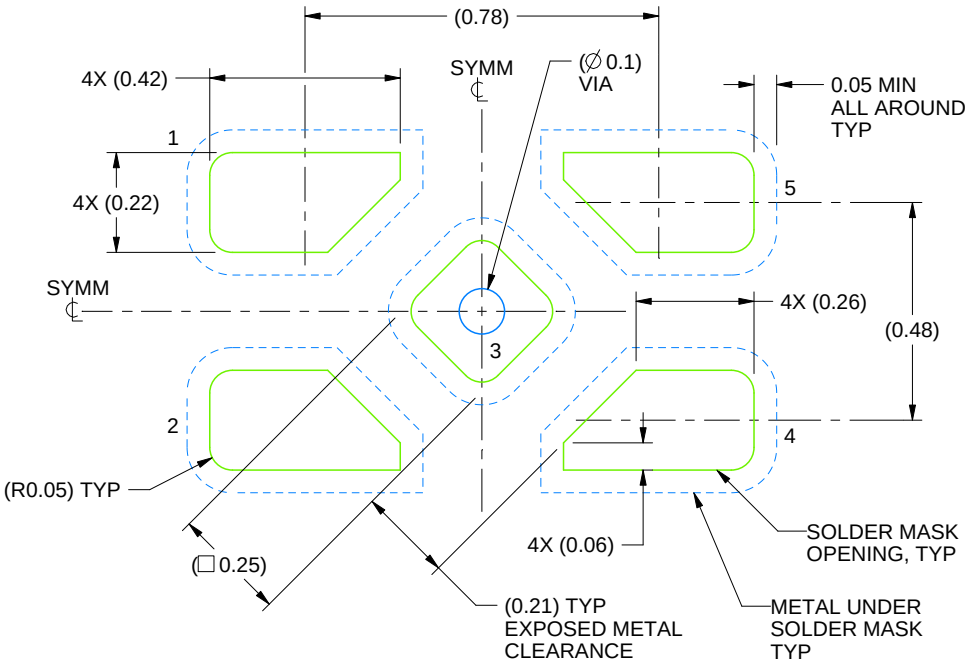

LAND PATTERN EXAMPLE
SOLDER MASK DEFINED
SCALE:60X

4223102/C 06/2021

NOTES: (continued)

4. This package is designed to be soldered to a thermal pad on the board. For more information, refer to QFN/SON PCB application note in literature No. SLUA271 (www.ti.com/lit/slua271).

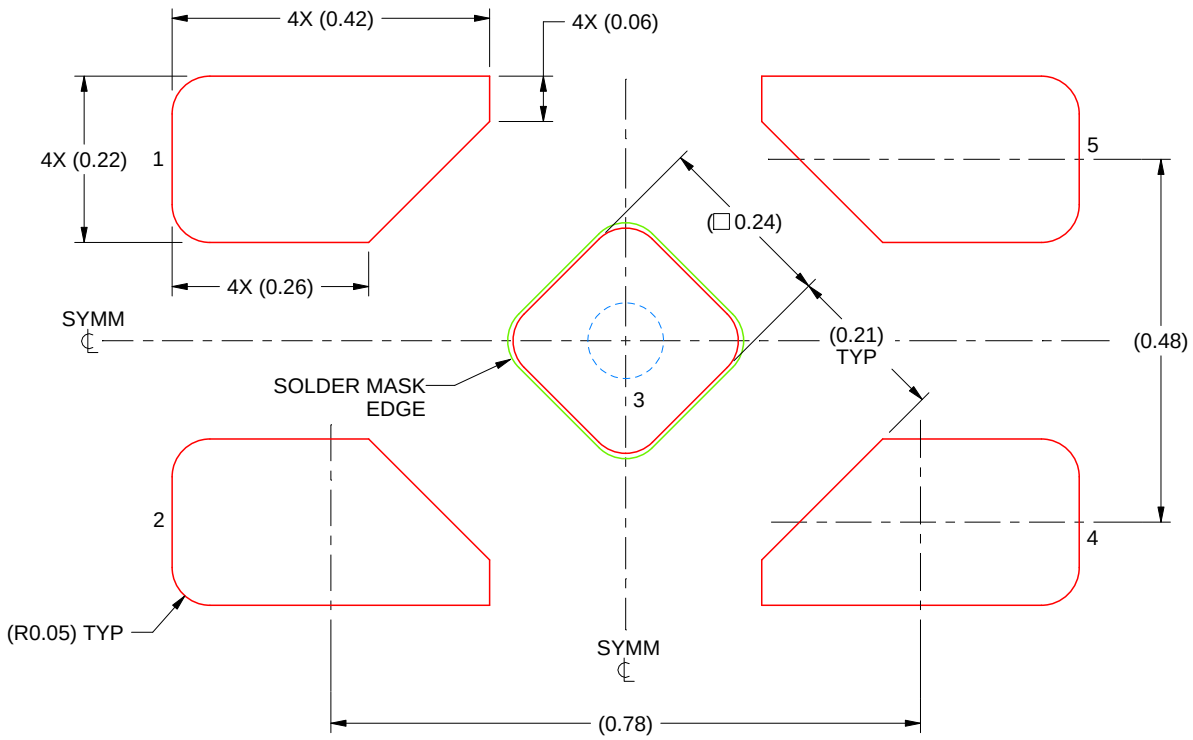

SOLDER PASTE EXAMPLE
BASED ON 0.1 mm THICK STENCIL

EXPOSED PAD 3
92% PRINTED SOLDER COVERAGE BY AREA UNDER PACKAGE
SCALE:100X

4223102/C 06/2021

NOTES: (continued)

5. Laser cutting apertures with trapezoidal walls and rounded corners may offer better paste release. IPC-7525 may have alternate design recommendations.

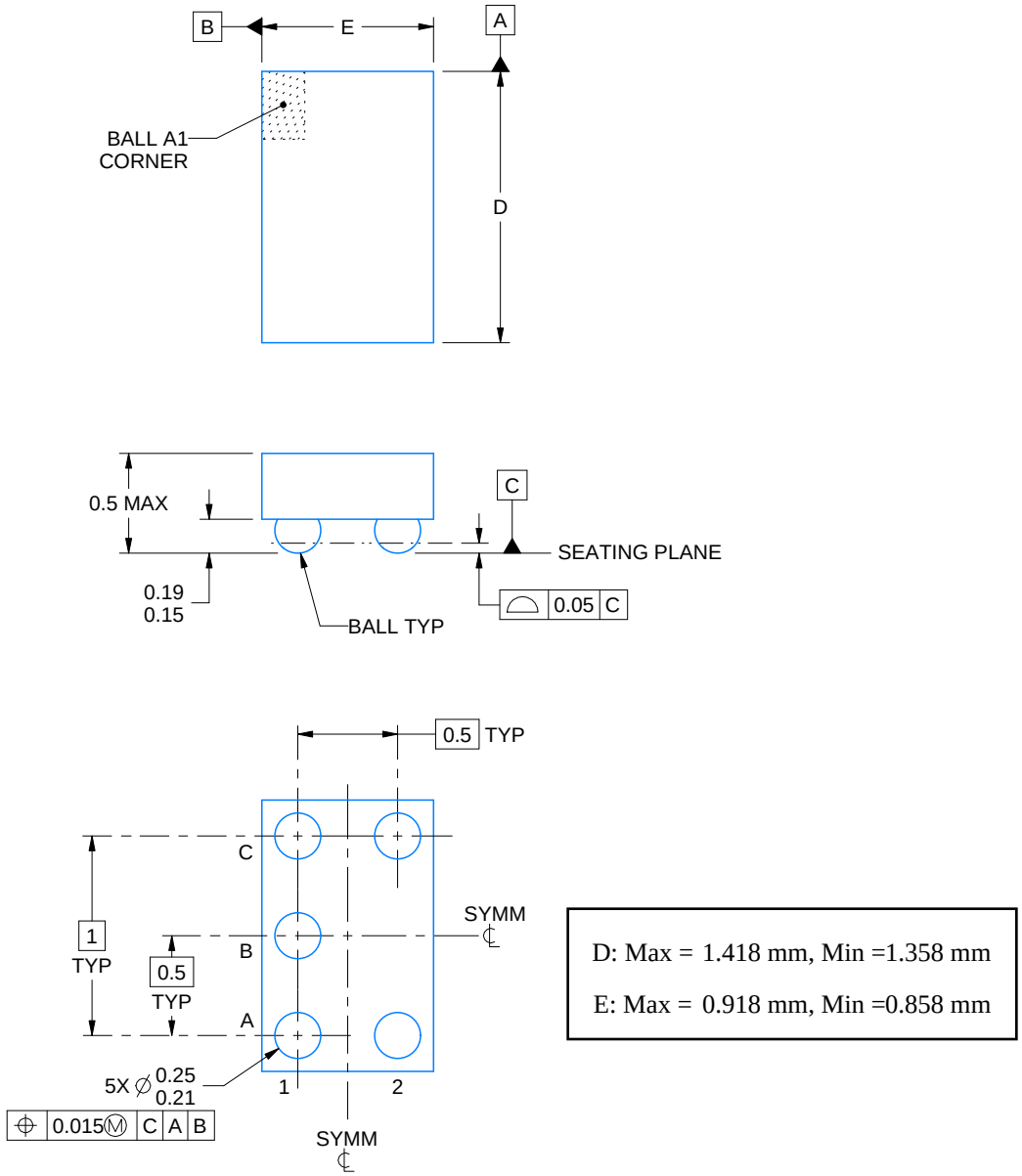

NOTES:

1. All linear dimensions are in millimeters. Any dimensions in parenthesis are for reference only. Dimensioning and tolerancing per ASME Y14.5M.
2. This drawing is subject to change without notice.

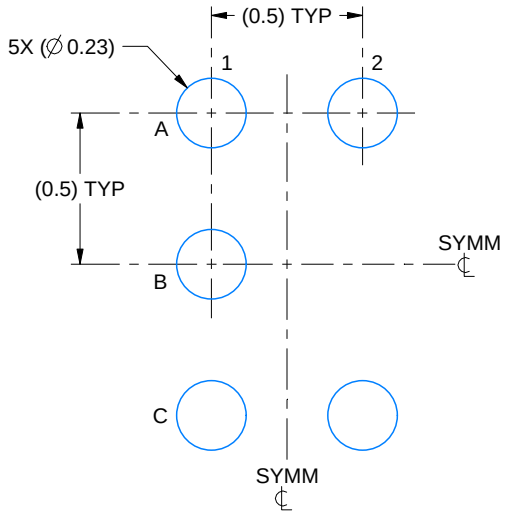

LAND PATTERN EXAMPLE
SCALE:40X

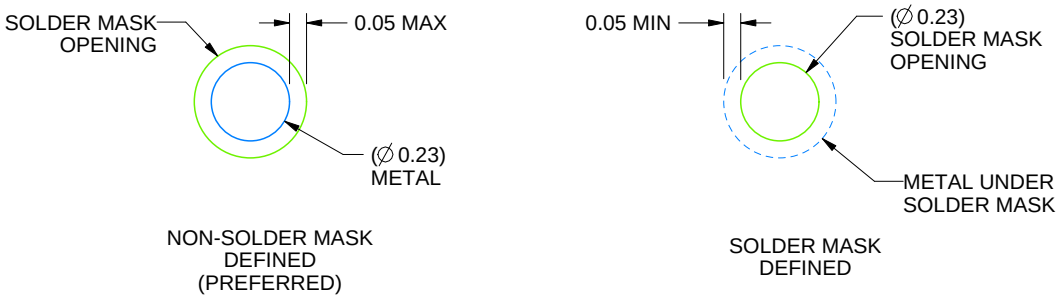

SOLDER MASK DETAILS
NOT TO SCALE

4219492/A 05/2017

NOTES: (continued)

3. Final dimensions may vary due to manufacturing tolerance considerations and also routing constraints. For more information, see Texas Instruments literature number SNVA009 (www.ti.com/lit/snva009).

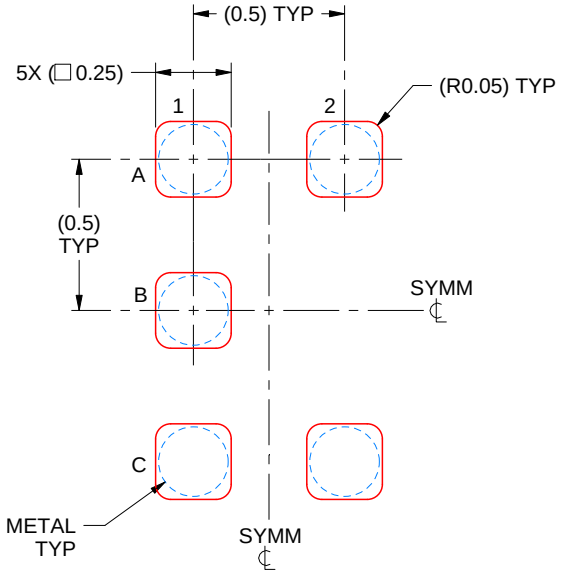

SOLDER PASTE EXAMPLE
BASED ON 0.1 mm THICK STENCIL
SCALE:40X

4219492/A 05/2017

NOTES: (continued)

4. Laser cutting apertures with trapezoidal walls and rounded corners may offer better paste release.

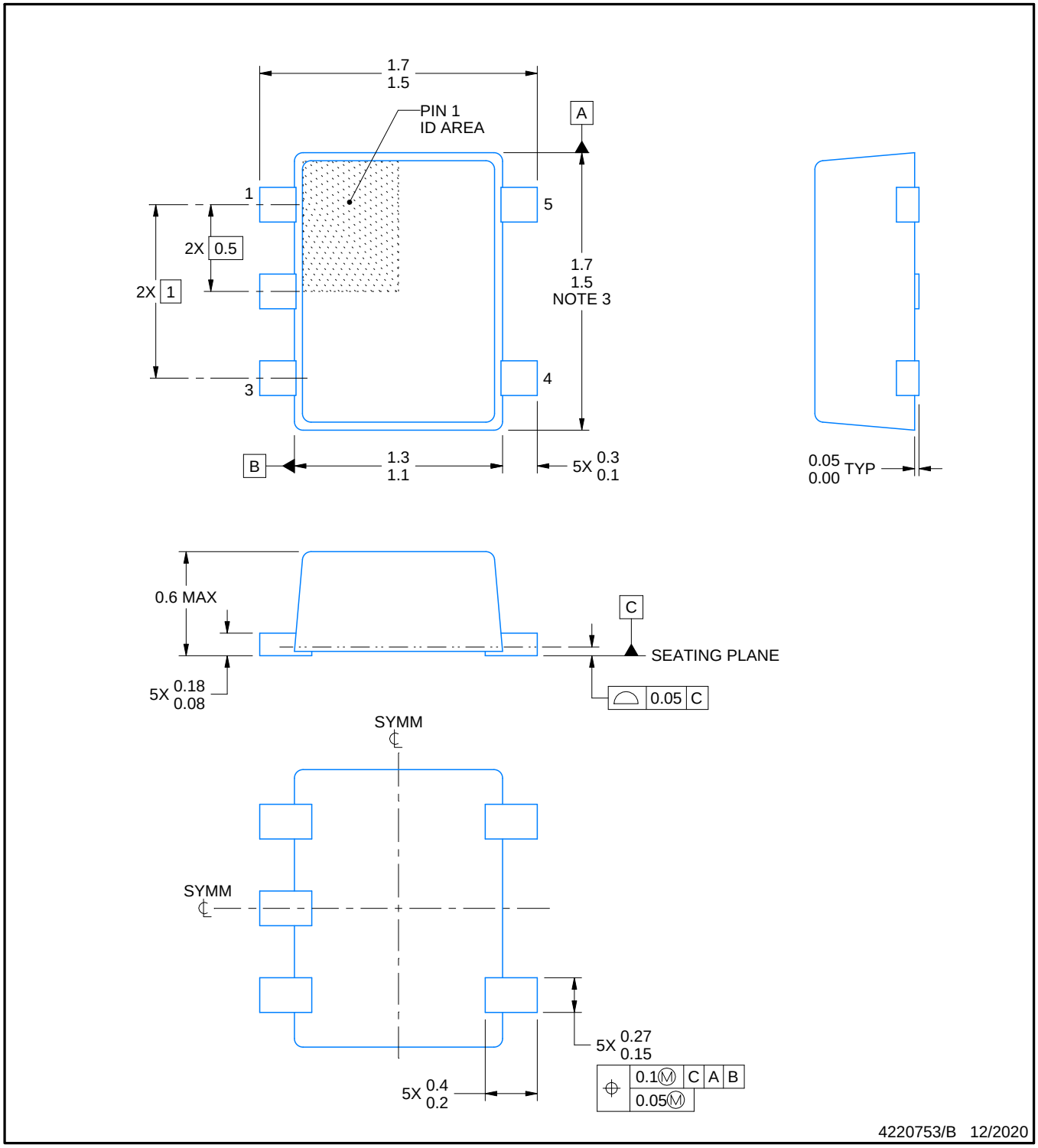

NOTES:

1. All linear dimensions are in millimeters. Any dimensions in parenthesis are for reference only. Dimensioning and tolerancing per ASME Y14.5M.
2. This drawing is subject to change without notice.
3. This dimension does not include mold flash, protrusions, or gate burrs. Mold flash, protrusions, or gate burrs shall not exceed 0.15 mm per side.
4. Reference JEDEC registration MO-293 Variation UAAD-1

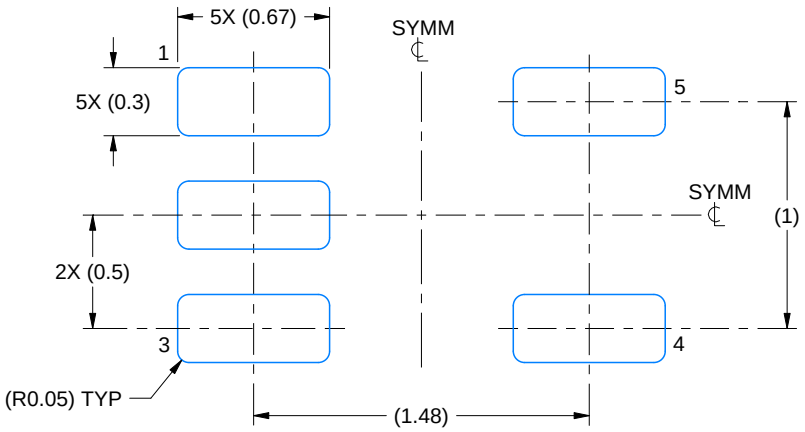

LAND PATTERN EXAMPLE
SCALE:30X

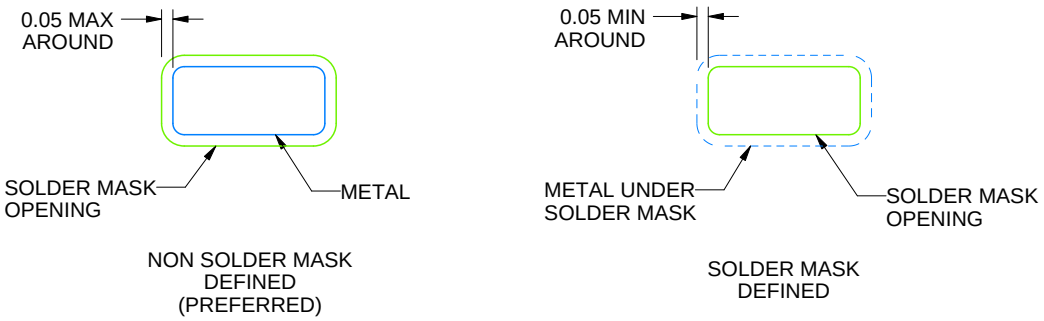

SOLDERMASK DETAILS

4220753/B 12/2020

NOTES: (continued)

5. Publication IPC-7351 may have alternate designs.
6. Solder mask tolerances between and around signal pads can vary based on board fabrication site.

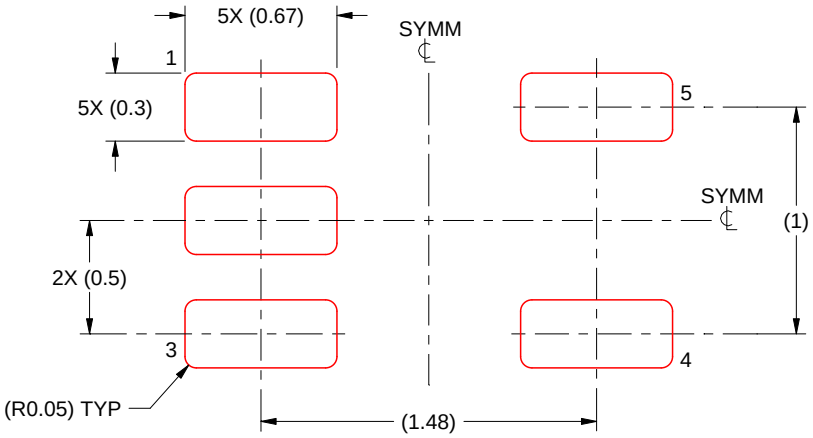

SOLDER PASTE EXAMPLE
BASED ON 0.1 mm THICK STENCIL
SCALE:30X

4220753/B 12/2020

NOTES: (continued)

7. Laser cutting apertures with trapezoidal walls and rounded corners may offer better paste release. IPC-7525 may have alternate design recommendations.
8. Board assembly site may have different recommendations for stencil design.

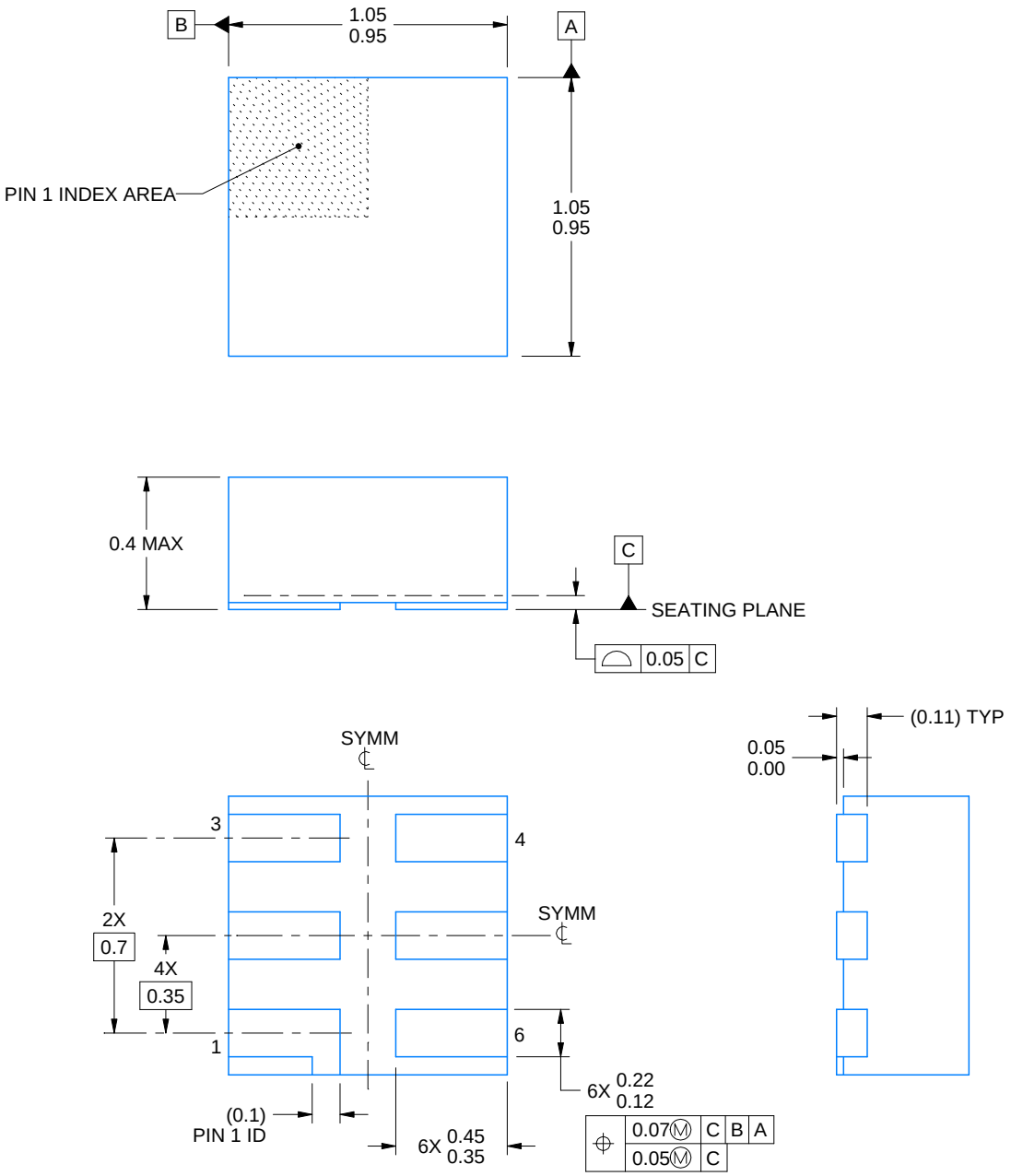

4220597/A 06/2017

NOTES:

1. All linear dimensions are in millimeters. Any dimensions in parenthesis are for reference only. Dimensioning and tolerancing per ASME Y14.5M.
2. This drawing is subject to change without notice.
3. Reference JEDEC registration MO-287, variation X2AAF.

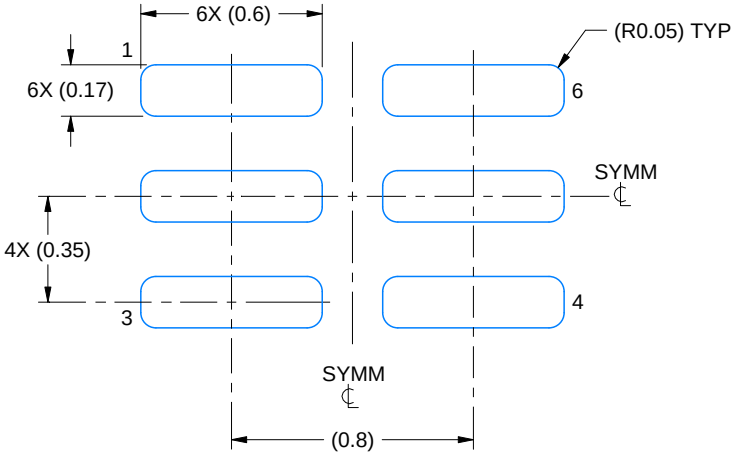

LAND PATTERN EXAMPLE
EXPOSED METAL SHOWN
SCALE:40X

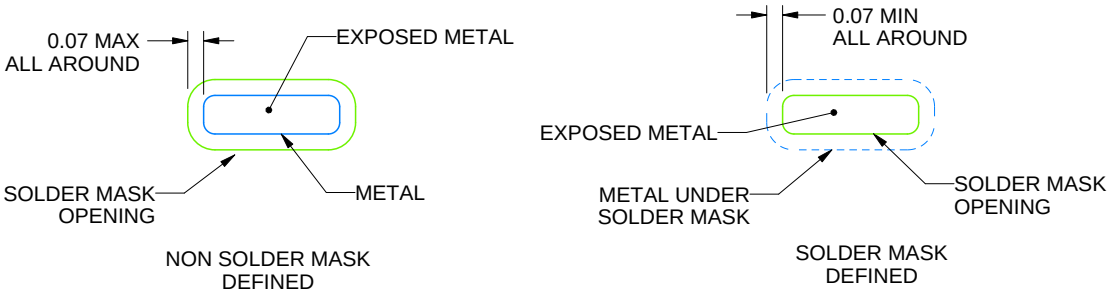

SOLDER MASK DETAILS

4220597/A 06/2017

NOTES: (continued)

4. For more information, see Texas Instruments literature number SLUA271 (www.ti.com/lit/slua271).

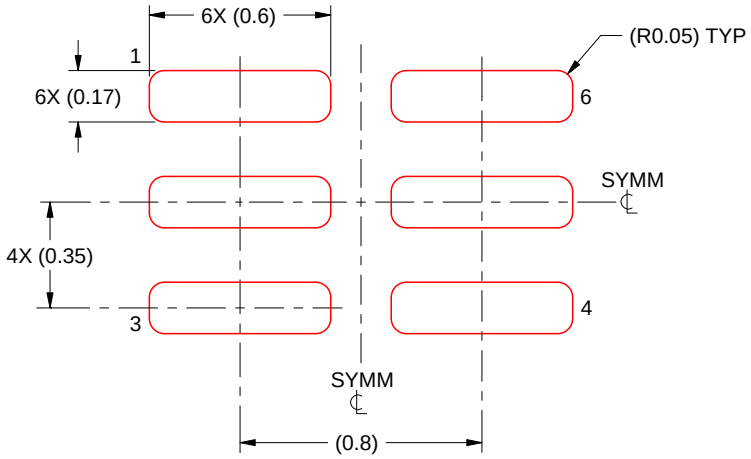

SOLDER PASTE EXAMPLE
BASED ON 0.125 mm THICK STENCIL

PRINTED SOLDER COVERAGE BY AREA UNDER PACKAGE
SCALE:40X

4220597/A 06/2017

4. Laser cutting apertures with trapezoidal walls and rounded corners may offer better paste release. IPC-7525 may have alternate design recommendations.

DCK (R–PDSO–G5) PLASTIC SMALL–OUTLINE PACKAGE

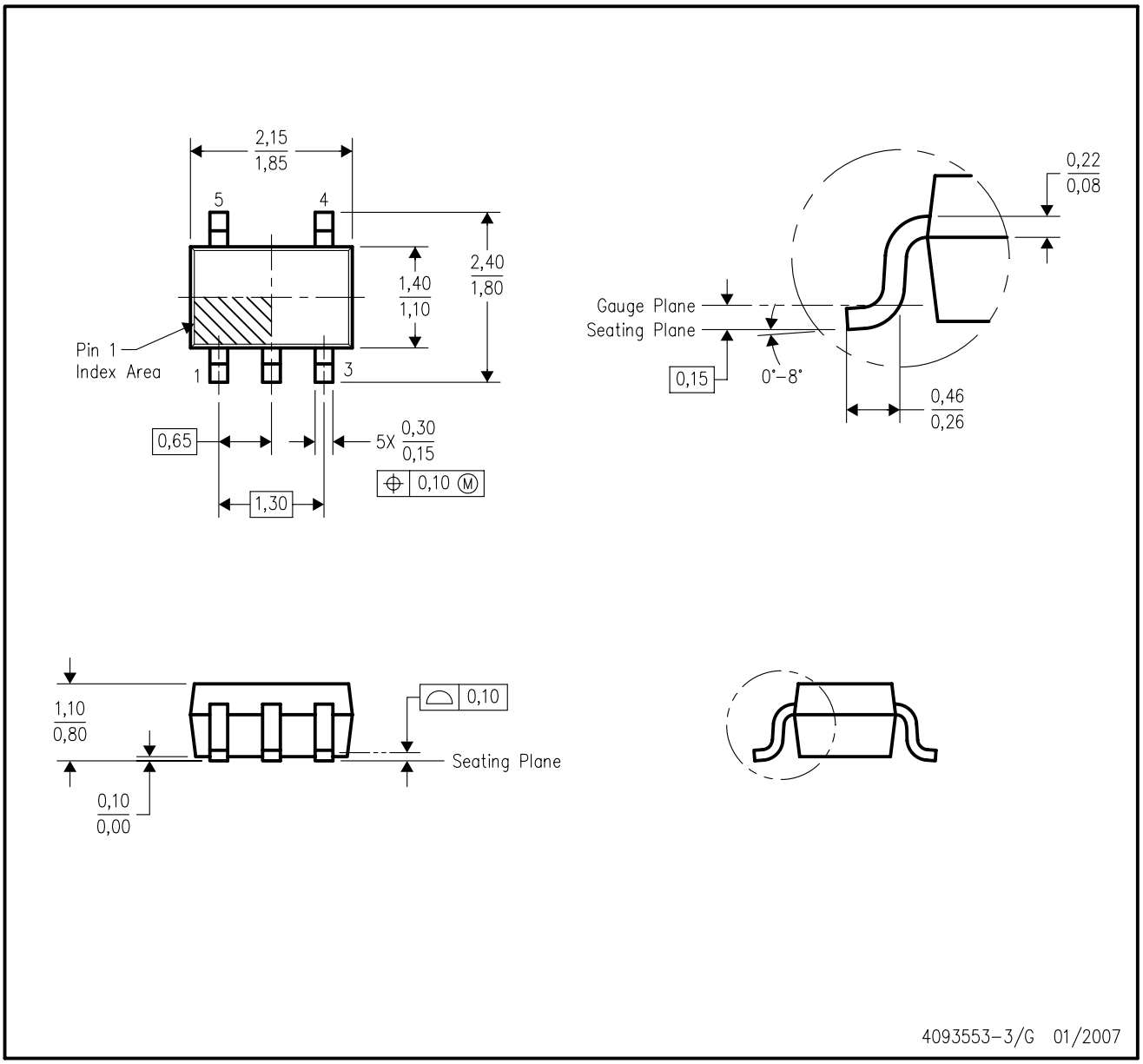

NOTES:
A. All linear dimensions are in millimeters.
B. This drawing is subject to change without notice.
C. Body dimensions do not include mold flash or protrusion. Mold flash and protrusion shall not exceed 0.15 per side.
D. Falls within JEDEC MO–203 variation AA.

DCK (R-PDSO-G5) PLASTIC SMALL OUTLINE

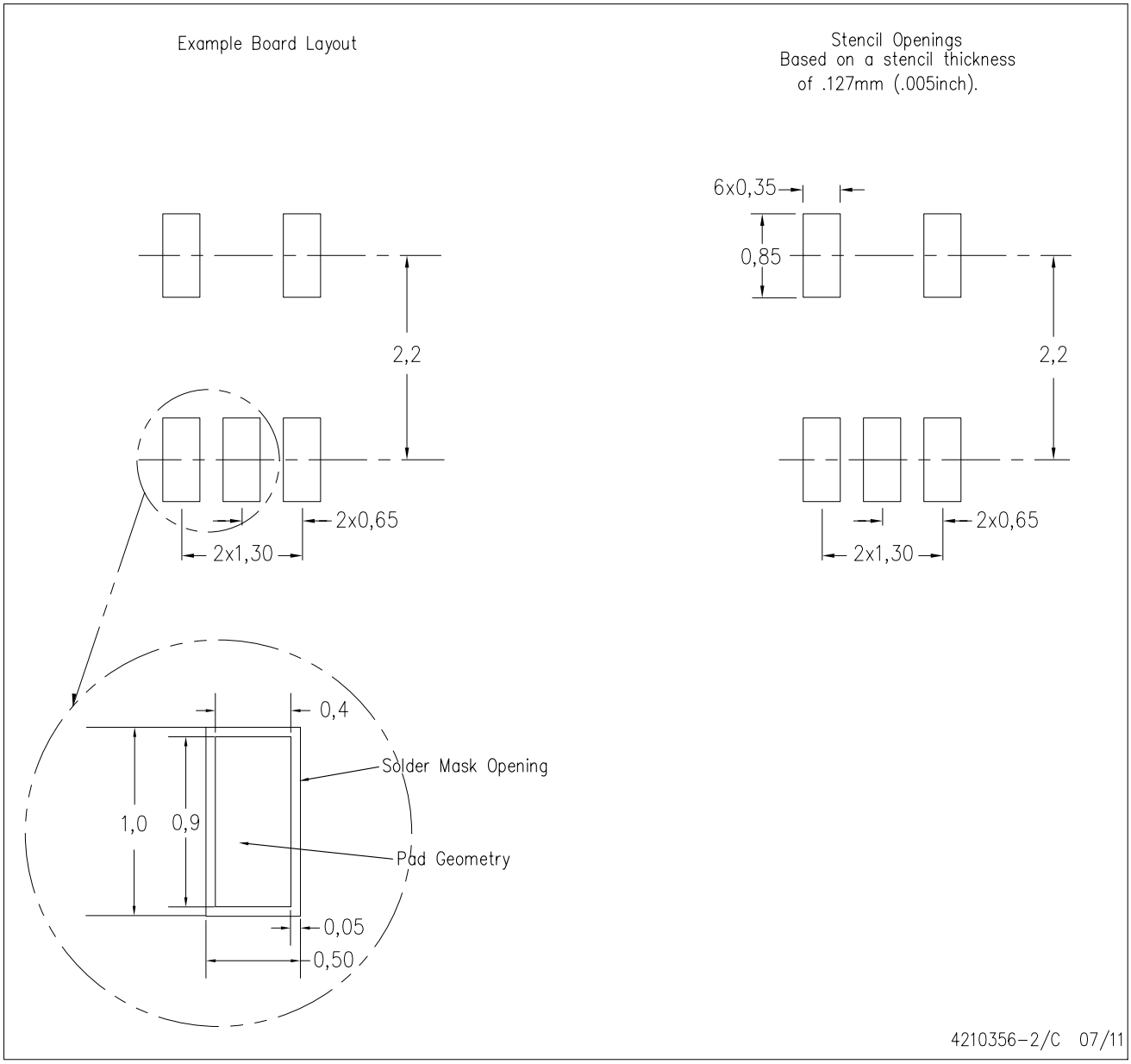

NOTES:
A. All linear dimensions are in millimeters.
B. This drawing is subject to change without notice.
C. Customers should place a note on the circuit board fabrication drawing not to alter the center solder mask defined pad.
D. Publication IPC-7351 is recommended for alternate designs.
E. Laser cutting apertures with trapezoidal walls and also rounding corners will offer better paste release. Customers should contact their board assembly site for stencil design recommendations. Example stencil design based on a 50% volumetric metal load solder paste. Refer to IPC-7525 for other stencil recommendations.

Images above are just a representation of the package family, actual package may vary.
Refer to the product data sheet for package details.

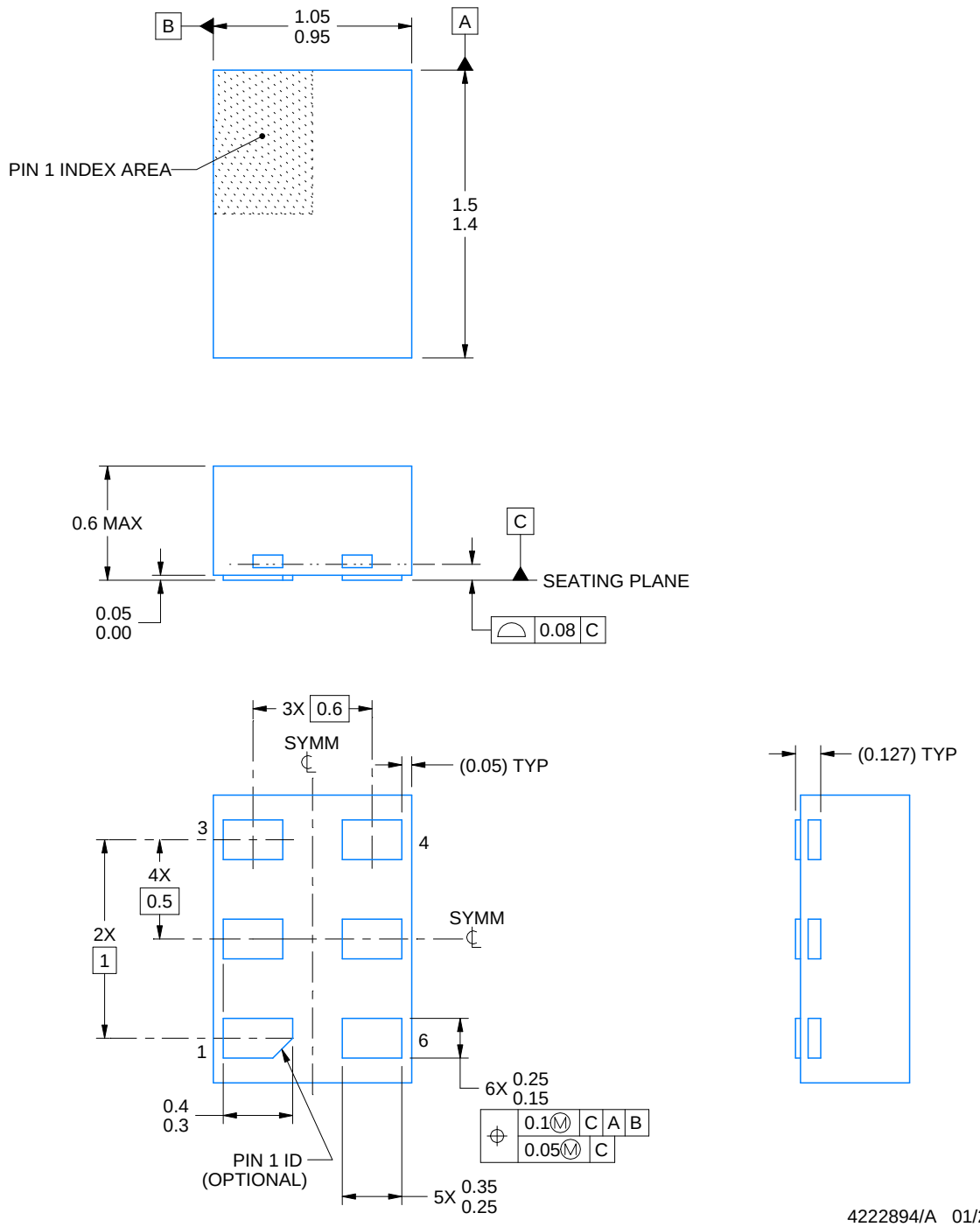

NOTES:

1. All linear dimensions are in millimeters. Any dimensions in parenthesis are for reference only. Dimensioning and tolerancing per ASME Y14.5M.
2. This drawing is subject to change without notice.

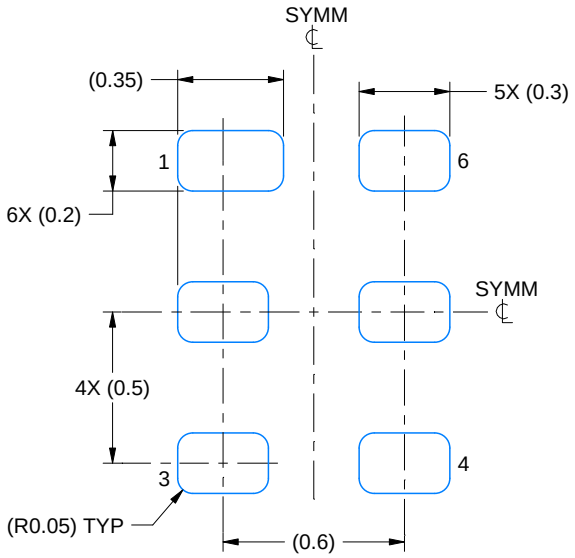

LAND PATTERN EXAMPLE
1:1 RATIO WITH PKG SOLDER PADS
EXPOSED METAL SHOWN
SCALE:40X

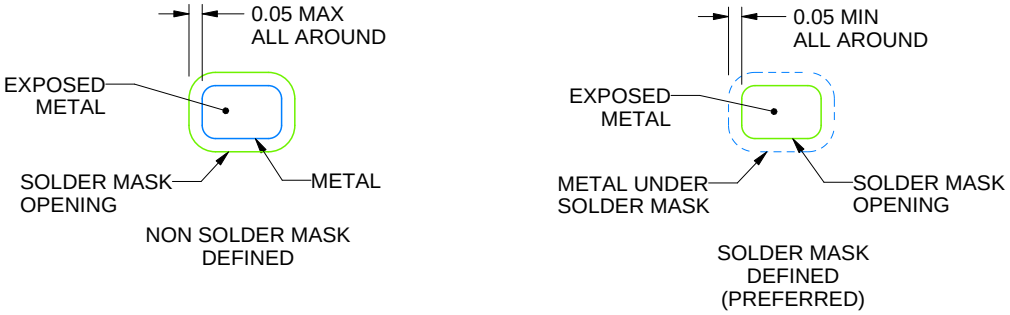

SOLDER MASK DETAILS

4222894/A 01/2018

NOTES: (continued)

3. For more information, see QFN/SON PCB application report in literature No. SLUA271 (www.ti.com/lit/slua271).

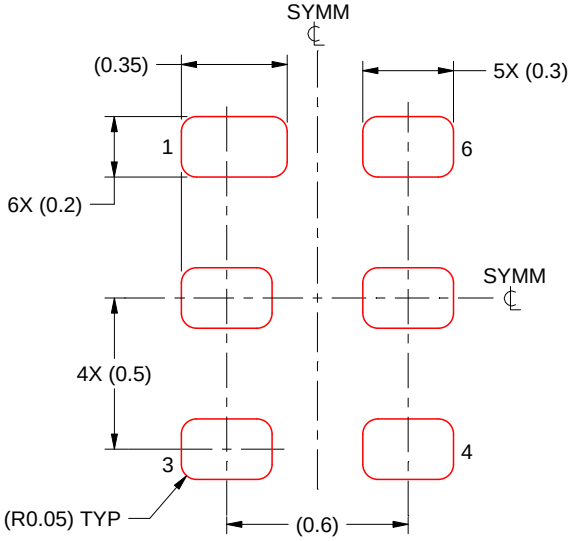

SOLDER PASTE EXAMPLE
BASED ON 0.075 - 0.1 mm THICK STENCIL
SCALE:40X

4222894/A 01/2018

NOTES: (continued)

4. Laser cutting apertures with trapezoidal walls and rounded corners may offer better paste release. IPC-7525 may have alternate design recommendations.

IMPORTANT NOTICE AND DISCLAIMER

TI PROVIDES TECHNICAL AND RELIABILITY DATA (INCLUDING DATA SHEETS), DESIGN RESOURCES (INCLUDING REFERENCE DESIGNS), APPLICATION OR OTHER DESIGN ADVICE, WEB TOOLS, SAFETY INFORMATION, AND OTHER RESOURCES “AS IS” AND WITH ALL FAULTS, AND DISCLAIMS ALL WARRANTIES, EXPRESS AND IMPLIED, INCLUDING WITHOUT LIMITATION ANY IMPLIED WARRANTIES OF MERCHANTABILITY, FITNESS FOR A PARTICULAR PURPOSE OR NON-INFRINGEMENT OF THIRD PARTY INTELLECTUAL PROPERTY RIGHTS.

These resources are intended for skilled developers designing with TI products. You are solely responsible for (1) selecting the appropriate TI products for your application, (2) designing, validating and testing your application, and (3) ensuring your application meets applicable standards, and any other safety, security, regulatory or other requirements.

These resources are subject to change without notice. TI grants you permission to use these resources only for development of an application that uses the TI products described in the resource. Other reproduction and display of these resources is prohibited. No license is granted to any other TI intellectual property right or to any third party intellectual property right. TI disclaims responsibility for, and you will fully indemnify TI and its representatives against, any claims, damages, costs, losses, and liabilities arising out of your use of these resources.

TI’s products are provided subject to TI’s Terms of Sale or other applicable terms available either on ti.com or provided in conjunction with such TI products. TI’s provision of these resources does not expand or otherwise alter TI’s applicable warranties or warranty disclaimers for TI products.

TI objects to and rejects any additional or different terms you may have proposed.

Mailing Address: Texas Instruments, Post Office Box 655303, Dallas, Texas 75265
Copyright © 2022, Texas Instruments Incorporated