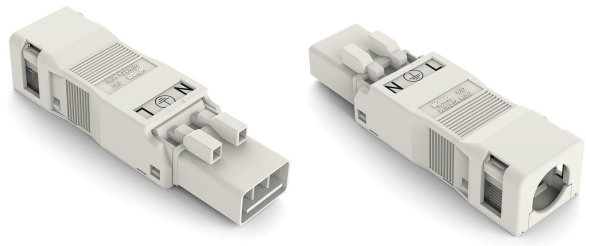

Color:

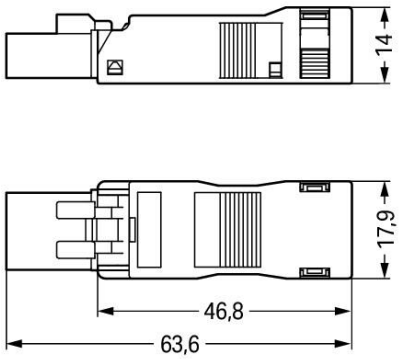

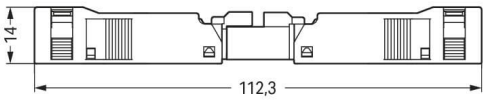

Dimensions in mm
Overall length when mated

Item description

Male connector/plug *WINSTA*® MINI with protection type IP40

The *WINSTA*® MINI male connector/plug with protection type IP40 allows assembly of fine-stranded and solid conductors. On PCBs, in control cabinets or for connecting lights – pluggable installation connectors from WAGO allow you to make connections according to an enormous variety

Subject to changes. Please also observe the further product documentation!

WAGO GmbH & Co. KG
Hansastr. 27
32423 Minden
Phone: +49571 887-0 | Fax: +49571 887-169
Email: info.de@wago.com | Web: www.wago.com

Do you have any questions about our products?
We are always happy to take your call at +49 (571) 887-44222.

of requirements in next to no time. The mechanical coding and color coding of the pluggable installation connector ensure error-free installation of the individual components – including protection against mismating. The pluggable installation connector is protected against ingress by solid granular objects with a diameter of less than 1 mm in accordance with protection type IP40. Standard mains applications for almost any domain of use can be implemented with *WINSTA*® MINI pluggable installation connectors with A coding. *WINSTA*® MINI satisfies the demand for miniaturisation. Our smallest pluggable connection system is especially suitable for lights, for example, since as a result of LED technology; due to complex systems, these offer less and less space for the connection technology. The strip length is 40 mm.

Push-in CAGE CLAMP® spring pressure connection technology – pluggable installation instead of laborious screw connections!

WINSTA® is the pluggable connection system that is perfectly tailored to the strict requirements of electrical installation. It ensures error-free installation of cables and components, quickly and reliably. Choose quality and durability – the *WINSTA*® MINI pluggable installation connector with protection against mismating from WAGO makes the electrical installation of electrical components significantly easier.

-
- pluggable installation connectors with protection against mismating
- compact design for conductors with a cross-section up to 1.5 mm²
- with A coding for use in many general mains applications
- custom-engineered solutions
- convenient installation and commissioning

Data
Electrical data

Ratings per IEC/EN

Ratings per	IEC/EN 60664-1
Nominal voltage (III/3)	250 V
Rated impulse voltage (III/3)	4 kV
Rated current	16 A
Legend (ratings)	(III / 3) ≙ Overvoltage category III / Pollution degree 3

Ratings per UL 1977

Note for the US market	Some versions may also be used for current interruption in accordance with the UL certificate in select applications with currents below 5 A and voltages up to 600 V. For further information, please contact your local sales office.
Rated voltage (UL 1977)	600 V
Rated current UL 1977	14 A

Subject to changes. Please also observe the further product documentation!

WAGO GmbH & Co. KG
Hansastr. 27
32423 Minden
Phone: +49571 887-0 | Fax: +49571 887-169
Email: info.de@wago.com | Web: www.wago.com

Do you have any questions about our products?
We are always happy to take your call at +49 (571) 887-44222.

General information

Note on contact resistance	approx. 1 mΩ of contact resistance approx. 0.25 mΩ contact transition plug/socket

Connection data

Connection points	3
Total number of potentials	3
PE function	Preceding PE contact

Connection 1

Connection technology	Push-in CAGE CLAMP®
Actuation type	Operating tool Push-in
Nominal cross-section	1.5 mm² / 16 AWG
Solid conductor	0.25 … 1.5 mm² / 22 … 16 AWG
Solid conductor; push-in termination	0.75 … 1.5 mm² / 20 … 16 AWG
Stranded conductor	0.25 … 1 mm² / 22 … 18 AWG
Fine-stranded conductor	0.25 … 1.5 mm² / 22 … 16 AWG
Fine-stranded conductor; with insulated ferrule	0.25 … 0.75 mm² / 22 … 20 AWG
Fine-stranded conductor; with uninsulated ferrule	0.25 … 0.75 mm² / 22 … 20 AWG
Fine-stranded conductor; with ferrule; push-in termination	0.75 mm² / 20 AWG
Strip length	9 mm / 0.35 inches
Pole number	3
Conductor entry direction to mating direction	0 °
Strip length (outer insulation)	40 mm

Physical data

Pin spacing	4.4 mm / 0.173 inches
Width	17.9 mm / 0.705 inches
Height	14 mm / 0.551 inches
Depth	63.6 mm / 2.504 inches

Mechanical Data

Application	General mains applications
Coding	A

Subject to changes. Please also observe the further product documentation!

WAGO GmbH & Co. KG
Hansastr. 27
32423 Minden
Phone: +49571 887-0 | Fax: +49571 887-169
Email: info.de@wago.com | Web: www.wago.com

Do you have any questions about our products?
We are always happy to take your call at +49 (571) 887-44222.

Coding	No
Marking	N ⏚ L
Potential marking	N ⏚ L
Mating force of a plug-in connection	approx. 20 … 70 N (depending on pole number)
Retention force of a plug-in connection	Locked: > 80 N
Unmating force of a plug-in connection	Unlocked: approx. 20 … 70 N (depending on pole number)
Mating cycles	200, without resistive load
Protection type	IP40

Plug-in connection

Contact type (pluggable connector)	Male connector/plug
Connector (connection type)	for conductor
Mismating protection	Yes
Mismating protection	All *WINSTA*® components are 100% protected against mismating when: a.) plugging different numbers of poles b.) plugging while rotated 180 c.) plugging while laterally staggered d.) plugging one pole
Locking lever	Can be retrofitted
Locking of plug-in connection	locking lever
Note on locking system	All connectors for mounted installations (snap-in versions for lighting fixtures or devices, all types of PCB and distribution connectors) are factory-equipped with locking levers to ensure plugs and sockets are securely locked. Additional locking levers are only required for flying leads (plug/socket).
Strain relief	strain relief housing

Material Data

Note (material data)	Information on material specifications can be found here
Color	white
Color	gray
Material group	I
Insulation material	Polyamide (PA66)
Flammability class per UL94	V0
Clamping spring material	Chrome-nickel spring steel (CrNi)
Contact material	Copper or copper alloy; surface-treated

Subject to changes. Please also observe the further product documentation!

WAGO GmbH & Co. KG
Hansastr. 27
32423 Minden
Phone: +49571 887-0 | Fax: +49571 887-169
Email: info.de@wago.com | Web: www.wago.com

Do you have any questions about our products?
We are always happy to take your call at +49 (571) 887-44222.

Contact plating	Tin
Fire load	0.284 MJ
Weight	6.6 g

Environmental requirements

Processing temperature	-5 … +40 °C
Continuous operating temperature	-35 … +85 °C
Note on continuous operating temperature	Insulating parts for temperatures ≤ 105 °C

Commercial data

Product Group	20 (Winsta)
eCl@ss 10.0	27-44-06-05
eCl@ss 10.0	27-44-06-05
ETIM 8.0	EC002560
ETIM 8.0	EC002560
PU (SPU)	50 pcs
Packaging type	box
Country of origin	DE
GTIN	4045454233013
Customs tariff number	85366990990

Environmental Product Compliance

RoHS Compliance Status	Compliant,No Exemption

Approvals / Certificates

General approvals

Logo	Approval	Additional Approval Text	Certificate name
	CCA DEKRA Certification B.V.	EN 61535	71-123231
	CCA DEKRA Certification B.V.	IEC 61535	NL-85020
	cURus Underwriters Laboratories Inc.	UL 1977	E45171

Subject to changes. Please also observe the further product documentation!

WAGO GmbH & Co. KG
Hansastr. 27
32423 Minden
Phone: +49571 887-0 | Fax: +49571 887-169
Email: info.de@wago.com | Web: www.wago.com

Do you have any questions about our products?
We are always happy to take your call at +49 (571) 887-44222.

Declarations of conformity and manufacturer's declarations

Logo	Approval	Additional Approval Text	Certificate name
	EU-Declaration of Conformity WAGO GmbH & Co. KG	-	-
	UK-Declaration of Conformity WAGO GmbH & Co. KG	-	-

Approvals for marine applications

Logo	Approval	Additional Approval Text	Certificate name
	ABS American Bureau of Shipping	Steel Vessel Rules	19-HG1869855-PDA
	DNV GL Det Norske Veritas, Germanischer Lloyd	-	TAE00001Z6
	LR Lloyds Register	EN 61535	08/20047 (E2)

Counterpart

Item no.890-123
Socket; with strain relief housing; 3-pole; Cod. A; 1,50 mm²; white

www.wago.com/890-123

Item no.890-223
Socket; 3-pole; Cod. A; 1,50 mm²; white

www.wago.com/890-223

Item no.890-656
T-distribution connector; 3-pole; Cod. A; 1 input; 2 outputs; 2 locking levers; white

www.wago.com/890-656

Subject to changes. Please also observe the further product documentation!

WAGO GmbH & Co. KG
Hansastr. 27
32423 Minden
Phone: +49571 887-0 | Fax: +49571 887-169
Email: info.de@wago.com | Web: www.wago.com

Do you have any questions about our products?
We are always happy to take your call at +49 (571) 887-44222.

	Item no.890-665 T-distribution connector; 3-pole; Cod. A; 1 input; 2 outputs; 3 locking levers; for flying leads; white	www.wago.com/890-665
	Item no.890-686 h-distribution connector; 3-pole; Cod. A; 1 input; 2 outputs; outputs on one side; 3 locking levers; for flying leads; white	www.wago.com/890-686
	Item no.890-684 h-distribution connector; 3-pole; Cod. A; 1 input; 2 outputs; outputs on one side; 2 locking levers; white	www.wago.com/890-684
	Item no.890-723 Snap-in socket; 3-pole; Cod. A; 1,50 mm²; white	www.wago.com/890-723
	Item no.890-823 Socket for PCBs; straight; 3-pole; Cod. A; white	www.wago.com/890-823
	Item no.890-823/011-000 Socket for PCBs; angled; 3-pole; Cod. A; white	www.wago.com/890-823/011-000
	Item no.891-8993/005-102 pre-assembled interconnecting cable; Eca; Socket/plug; 3-pole; Cod. A; 1 m; 1,00 mm²; white	www.wago.com/891-8993/005-102
	Item no.891-8993/105-102 pre-assembled connecting cable; Eca; Socket/open-ended; 3-pole; Cod. A; 1 m; 1,00 mm²; white	www.wago.com/891-8993/105-102

Required accessories

Locking levers

Locking system

	Item no.: 890-111 Locking lever; for flying leads; for tool operation; black	www.wago.com/890-111
	Item no.: 890-101 Locking lever; for manual operation; black	www.wago.com/890-101
	Item no.: 890-121 Locking lever; for manual operation; white	www.wago.com/890-121
	Item no.: 890-131 Locking lever; for flying leads; for tool operation; white	www.wago.com/890-131

Subject to changes. Please also observe the further product documentation!

WAGO GmbH & Co. KG
Hansastr. 27
32423 Minden
Phone: +49571 887-0 | Fax: +49571 887-169
Email: info.de@wago.com | Web: www.wago.com

Do you have any questions about our products?
We are always happy to take your call at +49 (571) 887-44222.

Optional accessories

Mounting

Mounting accessories

Item no.: 890-310
Mounting carrier; 2- to 5-pole; for flying leads; black

www.wago.com/890-310

Item no.: 890-311
Mounting carrier; 2- to 5-pole; for flying leads; white

www.wago.com/890-311

Shield termination

Shield termination

Item no.: 890-523
Shield connecting plate; 3-pole; for sockets and plugs; silver-colored

www.wago.com/890-523

Cover

Cover

Item no.: 897-2001
Protective cap; Type1; for sockets and plugs; PVC; red

www.wago.com/897-2001

Tool

Operating tool

Item no.: 210-719
Operating tool; Blade: 2.5 x 0.4 mm; with a partially insulated shaft

www.wago.com/210-719

Item no.: 890-383
Operating tool; 3-way; green

www.wago.com/890-383

Downloads

Documentation

Bid Text

890-133 X81 - Datei	2019 年2月19 日	xml 3.1 kB	Download
890-133 doc - Datei	2015 年6月8 日	doc 23.6 kB	Download

Subject to changes. Please also observe the further product documentation!

WAGO GmbH & Co. KG
Hansastr. 27
32423 Minden
Phone: +49571 887-0 | Fax: +49571 887-169
Email: info.de@wago.com | Web: www.wago.com

Do you have any questions about our products?
We are always happy to take your call at +49 (571) 887-44222.

CAD/CAE-Data

CAD data

2D/3D Models 890-133	URL	Download

CAE data

EPLAN Data Portal 890-133	URL	Download
WSCAD Universe 890-133	URL	Download
ZUKEN Portal 890-133	URL	Download

Environmental Product Compliance

Compliance Search

Environmental Product Compliance 890-133 Plug; with strain relief housing; 3-pole; 1,50 mm²; white	URL	Download

Installation Notes

Conductor termination

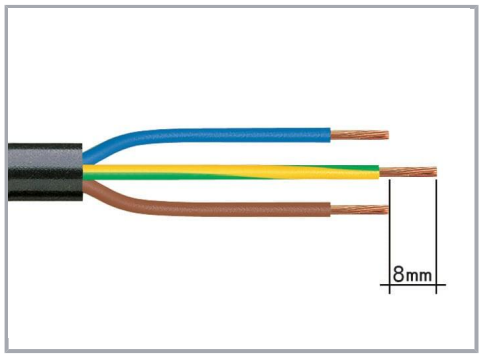

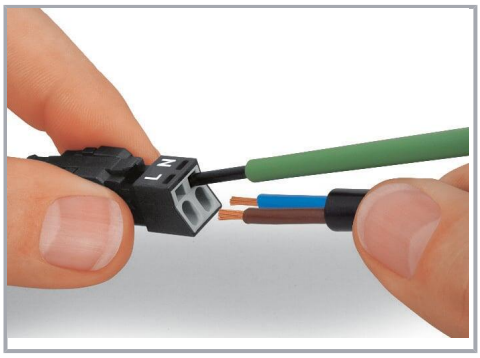

1. Strip length, outer insulation = 30 mm (2-pole), 37 mm (3-pole), 45 mm (4- and 5-pole)

2. Strip length = 9 mm

3. Extended ground conductor = 8 mm

To terminate fine-stranded conductors, open the clamping unit via screwdriver – 2.5 mm blade width – and insert a stripped conductor until it hits the backstop.
Terminate solid conductors by simply pushing them in.

Subject to changes. Please also observe the further product documentation!

WAGO GmbH & Co. KG
Hansastr. 27
32423 Minden
Phone: +49571 887-0 | Fax: +49571 887-169
Email: info.de@wago.com | Web: www.wago.com

Do you have any questions about our products?
We are always happy to take your call at +49 (571) 887-44222.

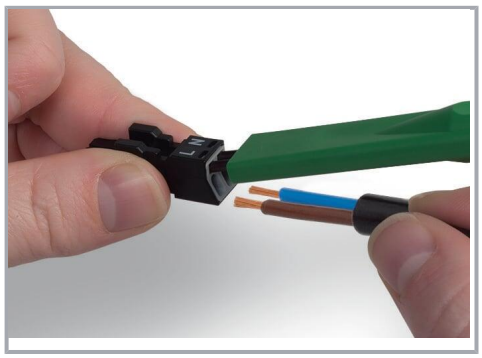

To terminate fine-stranded conductors, open clamping units via operating tool (890-382) and insert stripped conductors until they hit backstop.

Terminate solid conductors by simply pushing them in.

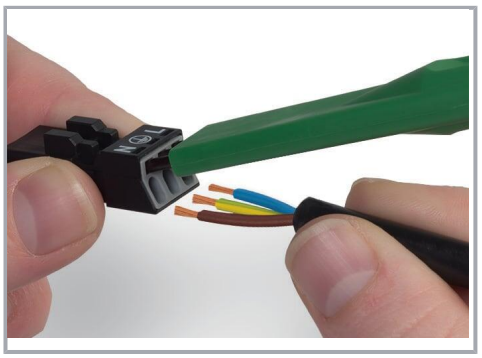

To terminate fine-stranded conductors, open clamping units via operating tool (890-383) and insert stripped conductors until they hit backstop.

Terminate solid conductors by simply pushing them in.

Installation

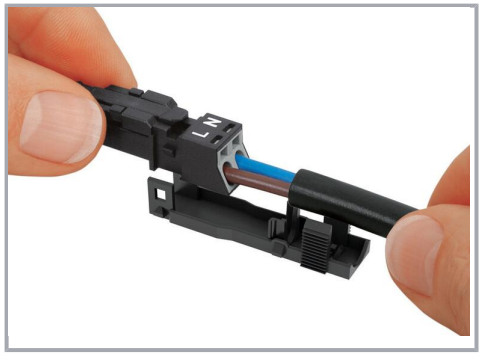

Latch the wired connector into the base of the strain relief housing.

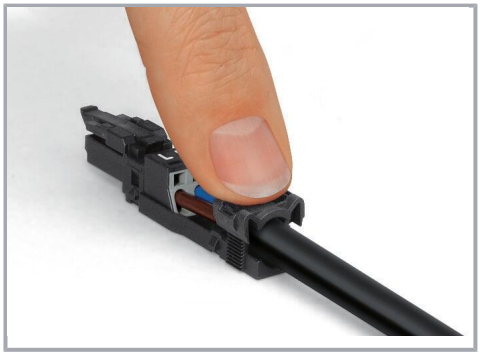

Push down strain relief clamp by hand.

WAGO GmbH & Co. KG
Hansastr. 27
32423 Minden
Phone: +49571 887-0 | Fax: +49571 887-169
Email: info.de@wago.com | Web: www.wago.com

Do you have any questions about our products?
We are always happy to take your call at +49 (571) 887-44222.

Push down strain relief clamp with 2.5 mm screwdriver alternately on both sides.

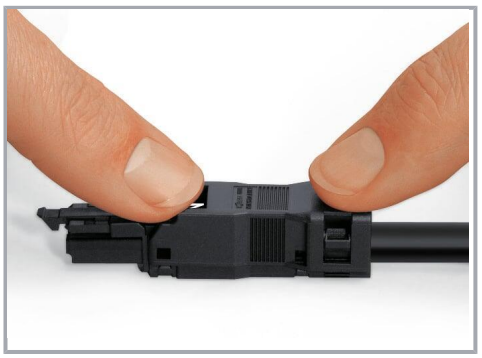

Latch the top of the strain relief housing.

The printed marking of the connector is clearly visible in the openings of the strain relief housing.

Shield termination

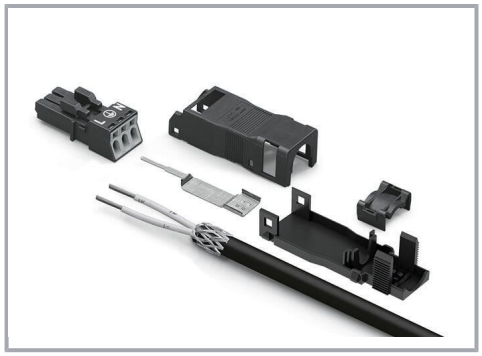

Connector with shield termination

Subject to changes. Please also observe the further product documentation!

WAGO GmbH & Co. KG
Hansastr. 27
32423 Minden
Phone: +49571 887-0 | Fax: +49571 887-169
Email: info.de@wago.com | Web: www.wago.com

Do you have any questions about our products?
We are always happy to take your call at +49 (571) 887-44222.

Apply the shield to the sheathed cable.

Strip length, outer insulation = 30 mm

Shield length = 8 mm

Push the shield connecting plate into the connector until fully inserted.

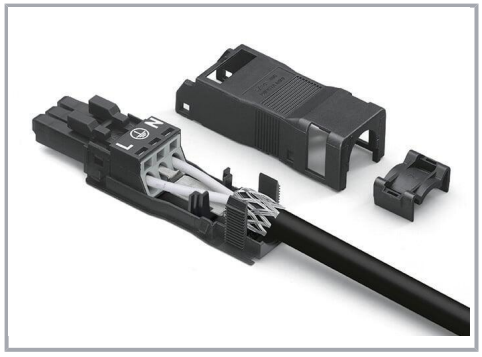

First insert the wired connector into strain relief housing, then snap clamp and cover.

Product family

WINSTA® MINI
Show all products from the family

Subject to changes. Please also observe the further product documentation!

WAGO GmbH & Co. KG
Hansastr. 27
32423 Minden
Phone: +49571 887-0 | Fax: +49571 887-169
Email: info.de@wago.com | Web: www.wago.com

Do you have any questions about our products?
We are always happy to take your call at +49 (571) 887-44222.