Color:

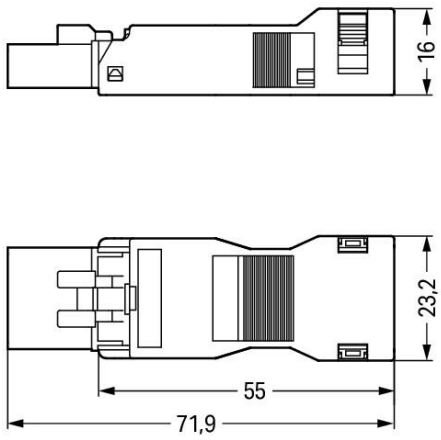

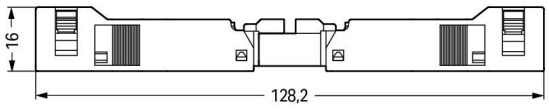

Dimensions in mm
Overall length when mated

Item description

Male connector/plug *WINSTA*® MINI rated current 16 A

The *WINSTA*® MINI male connector/plug with protection type IP40 supports fast, reliable installation. WAGO pluggable installation connectors are useful when specifications repeat or are planned on a specific grid, for example for installing grid lighting or flush-mount lighting. The coding options reduce installation errors, allowing fast, secure wiring of all components. The pluggable installation connector is protected in accordance with protection type IP40. Users' fingers and tools will never come into contact with live elements. Thanks to the color coding and mechanical A coding of *WINSTA*® MINI pluggable installation connectors, you can clearly distinguish different circuits. Thanks to its particularly small dimensions, our *WINSTA*® MINI Pluggable Connection System with Push-in CAGE CLAMP® spring pressure connection technology is especially suitable in very tight spaces, i.e., for installations when very little room is available. A range up to 45 mm can be used for the strip length.

WINSTA® MINI solutions for your electrical installation – protected against mismating and maintenance-free

Subject to changes. Please also observe the further product documentation!

WAGO GmbH & Co. KG
Hansastr. 27
32423 Minden
Phone: +49571 887-0 | Fax: +49571 887-169
Email: info.de@wago.com | Web: www.wago.com

Do you have any questions about our products?
We are always happy to take your call at +49 (571) 887-44222.

The WINSTA® Pluggable Connection System is perfectly tailored to the very strict requirements of building installation. It makes electrical installation pluggable, and consequently faster, more reliable, and error-free. Using this pre-assembled system decreases assembly times and installation errors at the construction site. Choose quality and durability – the *WINSTA*® MINI pluggable installation connector with protection against mismating from WAGO makes the installation of electrical components significantly easier.

-
- effective protection against mismating
- compact design for conductors with a cross-section up to 1.5 mm²
- with A coding for a large number of applications
- ready to install and use immediately
- quick replacement of defective units during ongoing operation

Data
Electrical data

Ratings per IEC/EN

Ratings per	IEC/EN 60664-1
Nominal voltage (III/3)	400 V
Rated impulse voltage (III/3)	6 kV
Rated current	16 A
Legend (ratings)	(III / 3) ≙ Overvoltage category III / Pollution degree 3

Ratings per UL 1977

Note for the US market	Some versions may also be used for current interruption in accordance with the UL certificate in select applications with currents below 5 A and voltages up to 600 V. For further information, please contact your local sales office.
Rated voltage (UL 1977)	600 V
Rated current UL 1977	12 A

General information

Note on contact resistance	approx. 1 mΩ of contact resistance approx. 0.25 mΩ contact transition plug/socket

Connection data

Connection points	4

Subject to changes. Please also observe the further product documentation!

WAGO GmbH & Co. KG
Hansastr. 27
32423 Minden
Phone: +49571 887-0 | Fax: +49571 887-169
Email: info.de@wago.com | Web: www.wago.com

Do you have any questions about our products?
We are always happy to take your call at +49 (571) 887-44222.

Total number of potentials	4
PE function	Preceding PE contact

Connection 1

Connection technology	Push-in CAGE CLAMP®
Actuation type	Operating tool Push-in
Nominal cross-section	1.5 mm² / 16 AWG
Solid conductor	0.25 … 1.5 mm² / 22 … 16 AWG
Solid conductor; push-in termination	0.75 … 1.5 mm² / 20 … 16 AWG
Stranded conductor	0.25 … 1 mm² / 22 … 18 AWG
Fine-stranded conductor	0.25 … 1.5 mm² / 22 … 16 AWG
Fine-stranded conductor; with insulated ferrule	0.25 … 0.75 mm² / 22 … 20 AWG
Fine-stranded conductor; with uninsulated ferrule	0.25 … 0.75 mm² / 22 … 20 AWG
Fine-stranded conductor; with ferrule; push-in termination	0.75 mm² / 20 AWG
Strip length	9 mm / 0.35 inches
Pole number	4
Connectable sheathed cable diameter	6.5 … 10.5 mm
Conductor entry direction to mating direction	0 °
Strip length (outer insulation)	45 mm

Physical data

Pin spacing	4.4 mm / 0.173 inches
Width	23.2 mm / 0.913 inches
Height	16 mm / 0.63 inches
Depth	71.9 mm / 2.831 inches

Mechanical Data

Application	General mains applications
Coding	A
Coding	No
Marking	1/L' 2/L ⏚ N
Potential marking	1/L' 2/L ⏚ N
Mating force of a plug-in connection	approx. 20 … 70 N (depending on pole number)
Retention force of a plug-in connection	Locked: > 80 N
Unmating force of a plug-in connection	Unlocked: approx. 20 … 70 N (depending on pole number)
Mating cycles	200, without resistive load

Subject to changes. Please also observe the further product documentation!

WAGO GmbH & Co. KG
Hansastr. 27
32423 Minden
Phone: +49571 887-0 | Fax: +49571 887-169
Email: info.de@wago.com | Web: www.wago.com

Do you have any questions about our products?
We are always happy to take your call at +49 (571) 887-44222.

Protection type	IP40

Plug-in connection

Contact type (pluggable connector)	Male connector/plug
Connector (connection type)	for conductor
Mismating protection	Yes
Mismating protection	All *WINSTA*® components are 100% protected against mismating when: a.) plugging different numbers of poles b.) plugging while rotated 180 c.) plugging while laterally staggered d.) plugging one pole
Locking lever	Can be retrofitted
Locking of plug-in connection	locking lever
Note on locking system	All connectors for mounted installations (snap-in versions for lighting fixtures or devices, all types of PCB and distribution connectors) are factory-equipped with locking levers to ensure plugs and sockets are securely locked. Additional locking levers are only required for flying leads (plug/socket).
Strain relief	strain relief housing

Material Data

Note (material data)	Information on material specifications can be found here
Color	black
Color	gray
Material group	I
Insulation material	Polyamide (PA66)
Flammability class per UL94	V0
Clamping spring material	Chrome-nickel spring steel (CrNi)
Contact material	Copper or copper alloy; surface-treated
Contact plating	Tin
Fire load	0.319 MJ
Weight	10.4 g

Environmental requirements

Processing temperature	-5 … +40 °C
Continuous operating temperature	-35 … +85 °C

Subject to changes. Please also observe the further product documentation!

WAGO GmbH & Co. KG
Hansastr. 27
32423 Minden
Phone: +49571 887-0 | Fax: +49571 887-169
Email: info.de@wago.com | Web: www.wago.com

Do you have any questions about our products?
We are always happy to take your call at +49 (571) 887-44222.

Note on continuous operating temperature	Insulating parts for temperatures ≤ 105 °C

Commercial data

Product Group	20 (Winsta)
eCl@ss 10.0	27-44-06-05
eCl@ss 10.0	27-44-06-05
ETIM 8.0	EC002560
ETIM 8.0	EC002560
PU (SPU)	50 pcs
Packaging type	box
Country of origin	DE
GTIN	4045454232917
Customs tariff number	85366990990

Environmental Product Compliance

RoHS Compliance Status	Compliant,No Exemption

Approvals / Certificates

General approvals

Logo	Approval	Additional Approval Text	Certificate name
	CCA DEKRA Certification B.V.	EN 61535	71-123231
	CCA DEKRA Certification B.V.	IEC 61535	NL-85020
	cURus Underwriters Laboratories Inc.	UL 1977	E45171

Declarations of conformity and manufacturer's declarations

Logo	Approval	Additional Approval Text	Certificate name
	EU-Declaration of Conformity WAGO GmbH & Co. KG	-	-
	UK-Declaration of Conformity	-	-

Subject to changes. Please also observe the further product documentation!

WAGO GmbH & Co. KG
Hansastr. 27
32423 Minden
Phone: +49571 887-0 | Fax: +49571 887-169
Email: info.de@wago.com | Web: www.wago.com

Do you have any questions about our products?
We are always happy to take your call at +49 (571) 887-44222.

WAGO GmbH & Co. KG

Approvals for marine applications

Logo	Approval	Additional Approval Text	Certificate name
	ABS American Bureau of Shipping	Steel Vessel Rules	19-HG1869855-PDA
	DNV GL Det Norske Veritas, Germanischer Lloyd	-	TAE00001Z6
	LR Lloyds Register	EN 61535	08/20047 (E2)

Counterpart

	Item no.890-104 Socket; with strain relief housing; 4-pole; Cod. A; 1,50 mm²; black	www.wago.com/890-104
	Item no.890-204 Socket; 4-pole; Cod. A; 1,50 mm²; black	www.wago.com/890-204
	Item no.890-626 T-distribution connector; 4-pole; Cod. A; 1 input; 2 outputs; 2 locking levers; black	www.wago.com/890-626
	Item no.890-627 T-distribution connector; 4-pole; Cod. A; 1 input; 2 outputs; 3 locking levers; for flying leads; black	www.wago.com/890-627
	Item no.890-704 Snap-in socket; 4-pole; Cod. A; 1,50 mm²; black	www.wago.com/890-704
	Item no.890-804 Socket for PCBs; straight; 4-pole; Cod. A; black	www.wago.com/890-804
	Item no.890-804/011-000 Socket for PCBs; angled; 4-pole; Cod. A; black	www.wago.com/890-804/011-000
	Item no.891-8994/006-101 pre-assembled interconnecting cable; Eca; Socket/plug; 4-pole; Cod. A; H05VV-F 4G 1.5 mm²; 1 m; 1,50 mm²; black	www.wago.com/891-8994/006-101

Subject to changes. Please also observe the further product documentation!

WAGO GmbH & Co. KG
Hansastr. 27
32423 Minden
Phone: +49571 887-0 | Fax: +49571 887-169
Email: info.de@wago.com | Web: www.wago.com

Do you have any questions about our products?
We are always happy to take your call at +49 (571) 887-44222.

	Item no.890-944 h-distribution connector; 4-pole; Cod. A; 1 input; 2 outputs; outputs on one side; 2 locking levers; black	www.wago.com/890-944
	Item no.890-945 h-distribution connector; 4-pole; Cod. A; 1 input; 2 outputs; outputs on one side; 3 locking levers; for flying leads; black	www.wago.com/890-945
	Item no.891-8994/106-101 pre-assembled connecting cable; Eca; Socket/open-ended; 4-pole; Cod. A; H05VV-F 4G 1.5 mm²; 1 m; 1,50 mm²; black	www.wago.com/891-8994/106-101

Required accessories

Locking levers

Locking system

	Item no.: 890-111 Locking lever; for flying leads; for tool operation; black	www.wago.com/890-111
	Item no.: 890-101 Locking lever; for manual operation; black	www.wago.com/890-101
	Item no.: 890-121 Locking lever; for manual operation; white	www.wago.com/890-121
	Item no.: 890-131 Locking lever; for flying leads; for tool operation; white	www.wago.com/890-131

Optional accessories

Mounting

Mounting accessories

	Item no.: 890-310 Mounting carrier; 2- to 5-pole; for flying leads; black	www.wago.com/890-310
	Item no.: 890-311 Mounting carrier; 2- to 5-pole; for flying leads; white	www.wago.com/890-311

Shield termination

Shield termination

Subject to changes. Please also observe the further product documentation!

WAGO GmbH & Co. KG
Hansastr. 27
32423 Minden
Phone: +49571 887-0 | Fax: +49571 887-169
Email: info.de@wago.com | Web: www.wago.com

Do you have any questions about our products?
We are always happy to take your call at +49 (571) 887-44222.

Item no.: 890-525
Shield connecting plate; 4-pole; for plugs
www.wago.com/890-525

Tool

Operating tool

Item no.: 210-719
Operating tool; Blade: 2.5 x 0.4 mm; with a partially insulated shaft
www.wago.com/210-719

Item no.: 890-384
Operating tool; 4-way; green
www.wago.com/890-384

Cover

Cover

Item no.: 897-2003
Protective cap; Type2; for sockets and plugs; PVC; red
www.wago.com/897-2003

Downloads

Documentation

Bid Text

890-114 X81 - Datei	2019 年2月19 日	xml 3.1 kB	Download
890-114 doc - Datei	2015 年6月8日	doc 24.1 kB	Download

CAD/CAE-Data

CAD data

2D/3D Models 890-114	URL	Download

CAE data

WSCAD Universe 890-114	URL	Download
ZUKEN Portal 890-114	URL	Download

Subject to changes. Please also observe the further product documentation!

WAGO GmbH & Co. KG
Hansastr. 27
32423 Minden
Phone: +49571 887-0 | Fax: +49571 887-169
Email: info.de@wago.com | Web: www.wago.com

Do you have any questions about our products?
We are always happy to take your call at +49 (571) 887-44222.

Environmental Product Compliance

Compliance Search

Environmental Product Compliance 890-114 Plug; with strain relief housing; 4-pole; 1,50 mm²; black	URL	Download

Installation Notes

Conductor termination

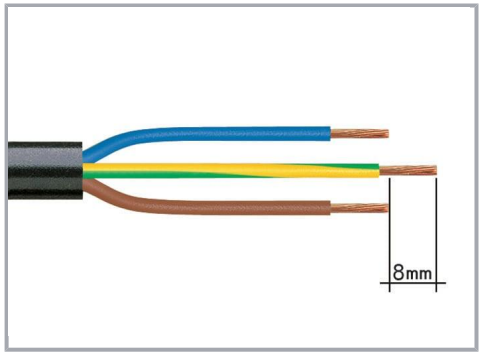

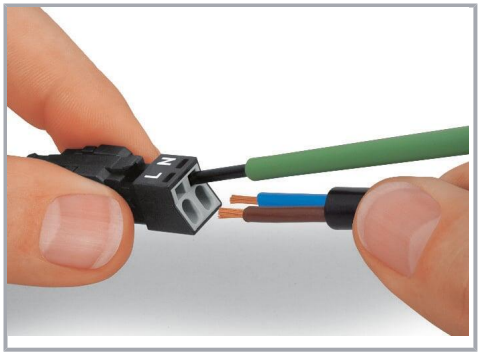

1. Strip length, outer insulation = 30 mm (2-pole), 37 mm (3-pole), 45 mm (4- and 5-pole)

2. Strip length = 9 mm

3. Extended ground conductor = 8 mm

To terminate fine-stranded conductors, open the clamping unit via screwdriver – 2.5 mm blade width – and insert a stripped conductor until it hits the backstop.
Terminate solid conductors by simply pushing them in.

WAGO GmbH & Co. KG
Hansastr. 27
32423 Minden
Phone: +49571 887-0 | Fax: +49571 887-169
Email: info.de@wago.com | Web: www.wago.com

Do you have any questions about our products?
We are always happy to take your call at +49 (571) 887-44222.

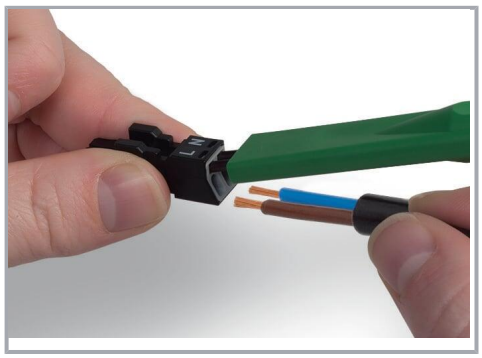

To terminate fine-stranded conductors, open clamping units via operating tool (890-382) and insert stripped conductors until they hit backstop.

Terminate solid conductors by simply pushing them in.

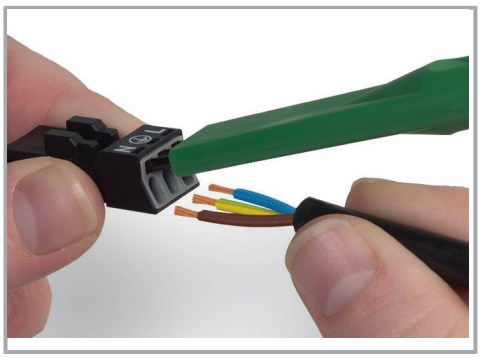

To terminate fine-stranded conductors, open clamping units via operating tool (890-383) and insert stripped conductors until they hit backstop.

Terminate solid conductors by simply pushing them in.

Installation

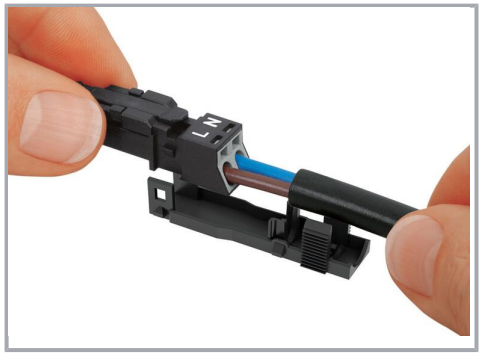

Latch the wired connector into the base of the strain relief housing.

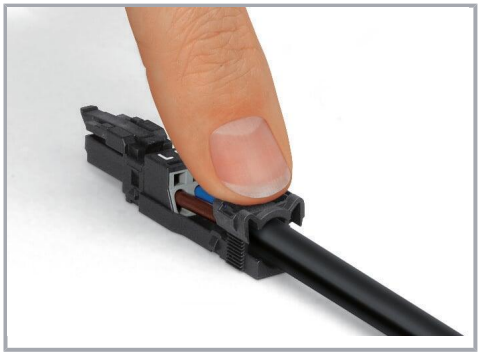

Push down strain relief clamp by hand.

WAGO GmbH & Co. KG
Hansastr. 27
32423 Minden
Phone: +49571 887-0 | Fax: +49571 887-169
Email: info.de@wago.com | Web: www.wago.com

Do you have any questions about our products?
We are always happy to take your call at +49 (571) 887-44222.

Push down strain relief clamp with 2.5 mm screwdriver alternately on both sides.

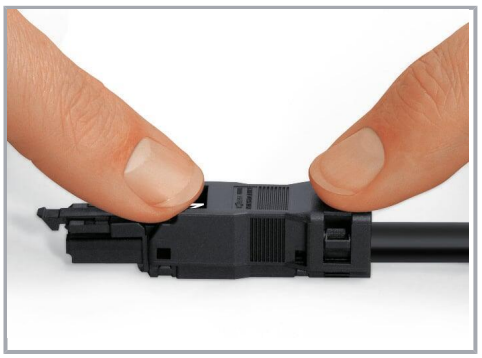

Latch the top of the strain relief housing.

The printed marking of the connector is clearly visible in the openings of the strain relief housing.

Shield termination

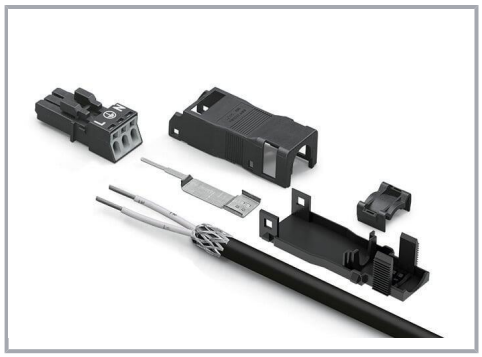

Connector with shield termination

WAGO GmbH & Co. KG
Hansastr. 27
32423 Minden
Phone: +49571 887-0 | Fax: +49571 887-169
Email: info.de@wago.com | Web: www.wago.com

Apply the shield to the sheathed cable.

Strip length, outer insulation = 30 mm

Shield length = 8 mm

Push the shield connecting plate into the connector until fully inserted.

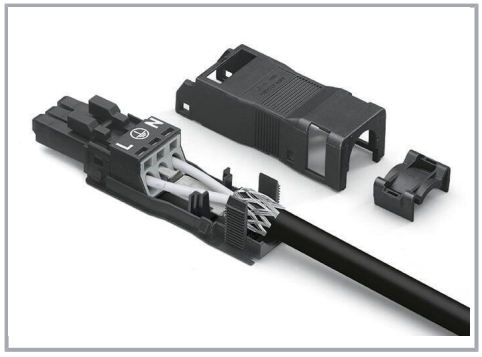

First insert the wired connector into strain relief housing, then snap clamp and cover.

Product family

WINSTA® MINI
Show all products from the family

Subject to changes. Please also observe the further product documentation!

WAGO GmbH & Co. KG
Hansastr. 27
32423 Minden
Phone: +49571 887-0 | Fax: +49571 887-169
Email: info.de@wago.com | Web: www.wago.com

Do you have any questions about our products?
We are always happy to take your call at +49 (571) 887-44222.