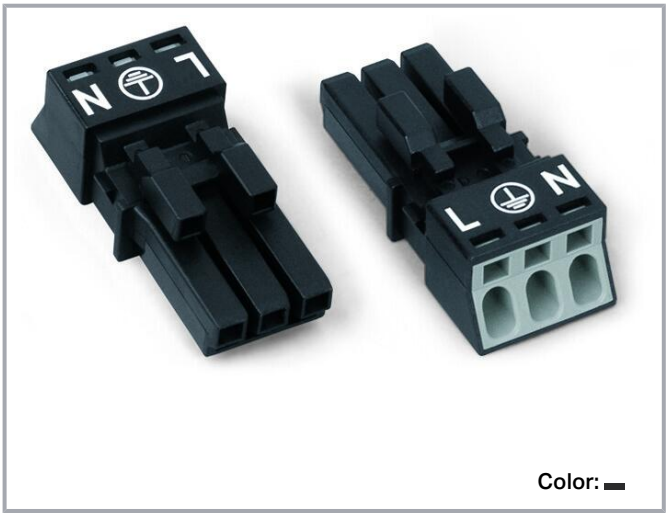

Color:

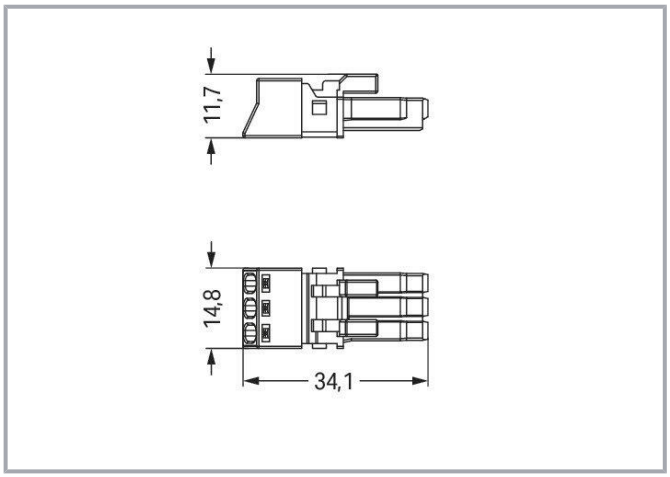

Item description

Female connector/socket *WINSTA*® MINI rated current 16 A

Use effective pluggable connections instead of laborious screw connections: With the *WINSTA*® MINI female connector/socket A coding. On PCBs, in control cabinets or for connecting lights – pluggable installation connectors from WAGO allow you to establish connections according to an enormous variety of requirements in no time flat. The coding options reduce installation errors, allowing fast, maintenance-free wiring of all components. Thanks to the color coding and mechanical A coding of *WINSTA*® MINI pluggable installation connectors, you can clearly distinguish different circuits. *WINSTA*® MINI satisfies the demand for miniaturisation. Our smallest pluggable connection system is very good for lights, for example, since as a result of LED technology; due to complex systems, these offer significantly less space for the connection technology.

Push-in CAGE CLAMP® spring pressure connection technology – pluggable installation instead of laborious screw connections!

The WINSTA® Pluggable Connection System is perfectly tailored to the strict requirements of building installation. It makes electrical installation pluggable, and thus more efficient, more reliable, and error-free. Using this pre-assembled system decreases assembly times and errors during installation at the construction site. Now you can also cut installation expenses without compromising quality and safety: The *WINSTA*® MINI pluggable installation connector with protection type IP20 reduces the need for servicing and prevents unnecessary downtime.

Subject to changes. Please also observe the further product documentation!

WAGO GmbH & Co. KG
Hansastr. 27
32423 Minden
Phone: +49571 887-0 | Fax: +49571 887-169
Email: info.de@wago.com | Web: www.wago.com

Do you have any questions about our products?
We are always happy to take your call at +49 (571) 887-44222.

-
- effective protection against mismating
- consistent IP40 protection
- with A coding for use in a large number of general mains applications
- custom-engineered solutions
- fast, secure installation

Data
Electrical data

Ratings per IEC/EN

Ratings per	IEC/EN 60664-1
Nominal voltage (III/3)	250 V
Rated impulse voltage (III/3)	4 kV
Rated current	16 A
Legend (ratings)	(III / 3) ≙ Overvoltage category III / Pollution degree 3

Ratings per UL 1977

Note for the US market	Some versions may also be used for current interruption in accordance with the UL certificate in select applications with currents below 5 A and voltages up to 600 V. For further information, please contact your local sales office.
Rated voltage (UL 1977)	600 V
Rated current UL 1977	14 A

General information

Note on contact resistance	approx. 1 mΩ of contact resistance approx. 0.25 mΩ contact transition plug/socket

Connection data

Connection points	3
Total number of potentials	3

Connection 1

Connection technology	Push-in CAGE CLAMP®
Actuation type	Operating tool Push-in

Subject to changes. Please also observe the further product documentation!

WAGO GmbH & Co. KG
Hansastr. 27
32423 Minden
Phone: +49571 887-0 | Fax: +49571 887-169
Email: info.de@wago.com | Web: www.wago.com

Do you have any questions about our products?
We are always happy to take your call at +49 (571) 887-44222.

Nominal cross-section	1.5 mm² / 16 AWG
Solid conductor	0.25 … 1.5 mm² / 22 … 16 AWG
Solid conductor; push-in termination	0.75 … 1.5 mm² / 20 … 16 AWG
Stranded conductor	0.25 … 1 mm² / 22 … 18 AWG
Fine-stranded conductor	0.25 … 1.5 mm² / 22 … 16 AWG
Fine-stranded conductor; with insulated ferrule	0.25 … 0.75 mm² / 22 … 20 AWG
Fine-stranded conductor; with uninsulated ferrule	0.25 … 0.75 mm² / 22 … 20 AWG
Fine-stranded conductor; with ferrule; push-in termination	0.75 mm² / 20 AWG
Strip length	9 mm / 0.35 inches
Pole number	3
Conductor entry direction to mating direction	0 °

Physical data

Pin spacing	4.4 mm / 0.173 inches
Width	15 mm / 0.591 inches
Height	11.7 mm / 0.461 inches
Depth	34.1 mm / 1.343 inches

Mechanical Data

Application	General mains applications
Coding	A
Coding	No
Marking	L ⏚ N
Potential marking	L ⏚ N
Mating force of a plug-in connection	approx. 20 … 70 N (depending on pole number)
Retention force of a plug-in connection	Locked: > 80 N
Unmating force of a plug-in connection	Unlocked: approx. 20 … 70 N (depending on pole number)
Mating cycles	200, without resistive load
Protection type	IP20; IP40 with strain relief housing

Plug-in connection

Contact type (pluggable connector)	Female connector/socket
Connector (connection type)	for conductor
Mismating protection	Yes
Mismating protection	All *WINSTA*® components are 100% protected against mismating when: a.) plugging different numbers of poles

Subject to changes. Please also observe the further product documentation!

WAGO GmbH & Co. KG
Hansastr. 27
32423 Minden
Phone: +49571 887-0 | Fax: +49571 887-169
Email: info.de@wago.com | Web: www.wago.com

Do you have any questions about our products?
We are always happy to take your call at +49 (571) 887-44222.

	b.) plugging while rotated 180 c.) plugging while laterally staggered d.) plugging one pole
Locking lever	Can be retrofitted
Locking of plug-in connection	locking lever
Note on locking system	All connectors for mounted installations (snap-in versions for lighting fixtures or devices, all types of PCB and distribution connectors) are factory-equipped with locking levers to ensure plugs and sockets are securely locked. Additional locking levers are only required for flying leads (plug/socket).

Material Data

Note (material data)	Information on material specifications can be found here
Color	black
Color	gray
Material group	I
Insulation material	Polyamide (PA66)
Flammability class per UL94	V0
Clamping spring material	Chrome-nickel spring steel (CrNi)
Contact material	Copper or copper alloy; surface-treated
Contact plating	Tin
Fire load	0.088 MJ
Weight	3.8 g

Environmental requirements

Processing temperature	-5 … +40 °C
Continuous operating temperature	-35 … +85 °C
Note on continuous operating temperature	Insulating parts for temperatures ≤ 105 °C

Commercial data

Product Group	20 (Winsta)
eCl@ss 10.0	27-44-06-05
eCl@ss 10.0	27-44-06-05
ETIM 8.0	EC002560
ETIM 8.0	EC002560
PU (SPU)	50 pcs
Packaging type	box

Subject to changes. Please also observe the further product documentation!

WAGO GmbH & Co. KG
Hansastr. 27
32423 Minden
Phone: +49571 887-0 | Fax: +49571 887-169
Email: info.de@wago.com | Web: www.wago.com

Do you have any questions about our products?
We are always happy to take your call at +49 (571) 887-44222.

Country of origin	PL
GTIN	4055143548519
Customs tariff number	85366990990

Environmental Product Compliance

RoHS Compliance Status	Compliant,No Exemption

Approvals / Certificates

General approvals

Logo	Approval	Additional Approval Text	Certificate name
	CCA DEKRA Certification B.V.	IEC 61535	NL-85020
	CCA DEKRA Certification B.V.	EN 61535	71-123231
	cURus Underwriters Laboratories Inc.	UL 1977	E45171

Declarations of conformity and manufacturer's declarations

Logo	Approval	Additional Approval Text	Certificate name
	EU-Declaration of Conformity WAGO GmbH & Co. KG	-	-
	UK-Declaration of Conformity WAGO GmbH & Co. KG	-	-

Approvals for marine applications

Logo	Approval	Additional Approval Text	Certificate name
	ABS American Bureau of Shipping	Steel Vessel Rules	19-HG1869855-PDA
	DNV GL	-	TAE00001Z6

Subject to changes. Please also observe the further product documentation!

WAGO GmbH & Co. KG
Hansastr. 27
32423 Minden
Phone: +49571 887-0 | Fax: +49571 887-169
Email: info.de@wago.com | Web: www.wago.com

Do you have any questions about our products?
We are always happy to take your call at +49 (571) 887-44222.

Det Norske Veritas, Germanischer Lloyd

LR Lloyds Register	EN 61535	08/20047 (E2)

Counterpart

	Item no.890-606 T-distribution connector; 3-pole; Cod. A; 1 input; 2 outputs; 2 locking levers; black	www.wago.com/890-606
	Item no.890-213 Plug; 3-pole; Cod. A; 1,50 mm²; black	www.wago.com/890-213
	Item no.890-113 Plug; with strain relief housing; 3-pole; 1,50 mm²; black	www.wago.com/890-113
	Item no.890-615 T-distribution connector; 3-pole; Cod. A; 1 input; 2 outputs; 3 locking levers; for flying leads; black	www.wago.com/890-615
	Item no.890-634 h-distribution connector; 3-pole; Cod. A; 1 input; 2 outputs; outputs on one side; 2 locking levers; black	www.wago.com/890-634
	Item no.890-636 h-distribution connector; 3-pole; Cod. A; 1 input; 2 outputs; outputs on one side; 3 locking levers; for flying leads; black	www.wago.com/890-636
	Item no.890-713 Snap-in plug; 3-pole; Cod. A; 1,50 mm²; black	www.wago.com/890-713
	Item no.890-813/011-000 Plug for PCBs; angled; 3-pole; Cod. A; black	www.wago.com/890-813/011-000
	Item no.890-813 Plug for PCBs; straight; 3-pole; Cod. A; black	www.wago.com/890-813
	Item no.891-8993/005-101 pre-assembled interconnecting cable; Eca; Socket/plug; 3-pole; Cod. A; 1 m; 1,00 mm²; black	www.wago.com/891-8993/005-101
	Item no.891-8993/205-101 pre-assembled connecting cable; Eca; Plug/open-ended; 3-pole; Cod. A; 1 m; 1,00 mm²; black	www.wago.com/891-8993/205-101

Subject to changes. Please also observe the further product documentation!

WAGO GmbH & Co. KG
Hansastr. 27
32423 Minden
Phone: +49571 887-0 | Fax: +49571 887-169
Email: info.de@wago.com | Web: www.wago.com

Do you have any questions about our products?
We are always happy to take your call at +49 (571) 887-44222.

Required accessories

Strain relief

Strain relief housing

Item no.: 890-513
Strain relief housing; 3-pole; with locking clip; for 1 cable; 4.5 … 10.0 mm; 37 mm; white

www.wago.com/890-513

Item no.: 890-503
Strain relief housing; 3-pole; with locking clip; for 1 cable; 4.5 … 10.0 mm; 37 mm; black

www.wago.com/890-503

Locking levers

Locking system

Item no.: 890-111
Locking lever; for flying leads; for tool operation; black

www.wago.com/890-111

Item no.: 890-101
Locking lever; for manual operation; black

www.wago.com/890-101

Item no.: 890-121
Locking lever; for manual operation; white

www.wago.com/890-121

Item no.: 890-131
Locking lever; for flying leads; for tool operation; white

www.wago.com/890-131

Optional accessories

Cover

Cover

Item no.: 897-2001
Protective cap; Type1; for sockets and plugs; PVC; red

www.wago.com/897-2001

Mounting

Mounting accessories

Item no.: 890-310
Mounting carrier; 2- to 5-pole; for flying leads; black

www.wago.com/890-310

Item no.: 890-311
Mounting carrier; 2- to 5-pole; for flying leads; white

www.wago.com/890-311

Subject to changes. Please also observe the further product documentation!

WAGO GmbH & Co. KG
Hansastr. 27
32423 Minden
Phone: +49571 887-0 | Fax: +49571 887-169
Email: info.de@wago.com | Web: www.wago.com

Do you have any questions about our products?
We are always happy to take your call at +49 (571) 887-44222.

Shield termination

Shield termination

Item no.: 890-523
Shield connecting plate; 3-pole; for sockets and plugs; silver-colored

www.wago.com/890-523

Tool

Operating tool

Item no.: 210-719
Operating tool; Blade: 2.5 x 0.4 mm; with a partially insulated shaft

www.wago.com/210-719

Item no.: 890-383
Operating tool; 3-way; green

www.wago.com/890-383

Downloads

Documentation

Bid Text

890-203 X81 - Datei	2019 年2月19 日	xml 3.0 kB	Download
890-203 doc - Datei	2015 年6月8日	doc 23.6 kB	Download

CAD/CAE-Data

CAE data

EPLAN Data Portal 890-203	URL	Download
WSCAD Universe 890-203	URL	Download
ZUKEN Portal 890-203	URL	Download

CAD data

2D/3D Models 890-203	URL	Download

Environmental Product Compliance

Compliance Search

Subject to changes. Please also observe the further product documentation!

WAGO GmbH & Co. KG
Hansastr. 27
32423 Minden
Phone: +49571 887-0 | Fax: +49571 887-169
Email: info.de@wago.com | Web: www.wago.com

Do you have any questions about our products?
We are always happy to take your call at +49 (571) 887-44222.

Environmental Product Compliance 890-203 URL Download

Socket; 3-pole; Cod. A; 1,50 mm²; black

Installation Notes

Conductor termination

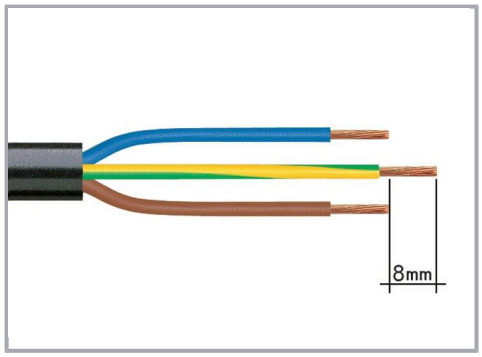

1. Strip length, outer insulation = 30 mm (2-pole), 37 mm (3-pole), 45 mm (4- and 5-pole)

2. Strip length = 9 mm

3. Extended ground conductor = 8 mm

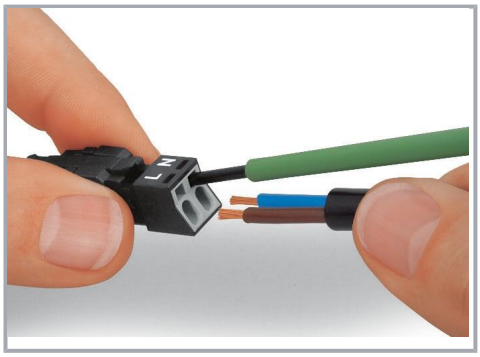

To terminate fine-stranded conductors, open the clamping unit via screwdriver – 2.5 mm blade width – and insert a stripped conductor until it hits the backstop.
Terminate solid conductors by simply pushing them in.

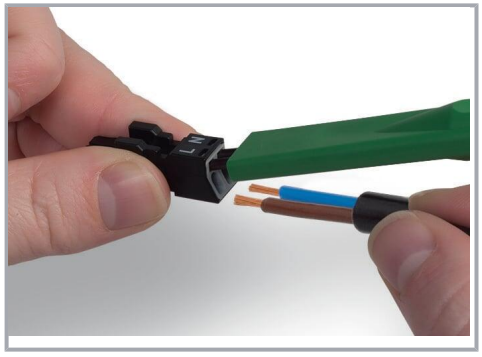

To terminate fine-stranded conductors, open clamping units via operating tool (890-382) and insert stripped conductors until they hit backstop.

Terminate solid conductors by simply pushing them in.

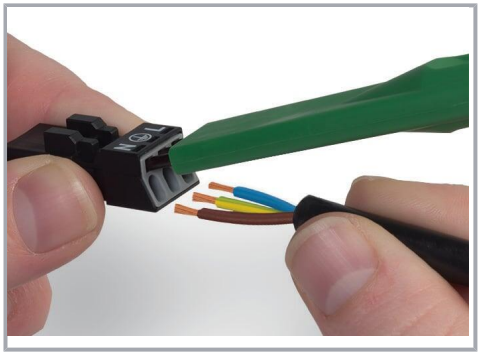

To terminate fine-stranded conductors, open clamping units via operating tool (890-383) and insert stripped conductors until they hit backstop.

Terminate solid conductors by simply pushing them in.

Installation

Subject to changes. Please also observe the further product documentation!

WAGO GmbH & Co. KG
Hansastr. 27
32423 Minden
Phone: +49571 887-0 | Fax: +49571 887-169
Email: info.de@wago.com | Web: www.wago.com

Do you have any questions about our products?
We are always happy to take your call at +49 (571) 887-44222.

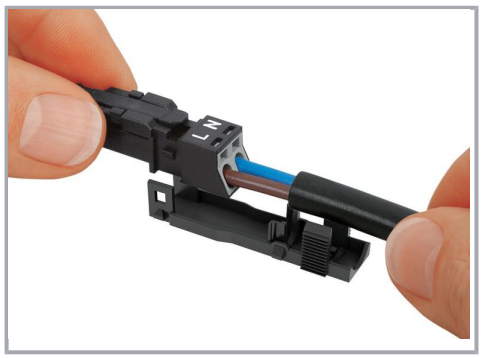

Latch the wired connector into the base of the strain relief housing.

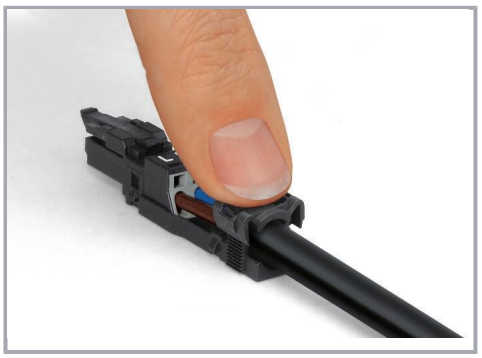

Push down strain relief clamp by hand.

Push down strain relief clamp with 2.5 mm screwdriver alternately on both sides.

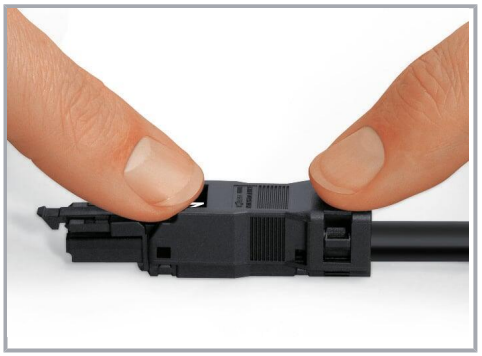

Latch the top of the strain relief housing.

The printed marking of the connector is clearly visible in the openings of the strain relief housing.

Shield termination

Subject to changes. Please also observe the further product documentation!

WAGO GmbH & Co. KG
Hansastr. 27
32423 Minden
Phone: +49571 887-0 | Fax: +49571 887-169
Email: info.de@wago.com | Web: www.wago.com

Do you have any questions about our products?
We are always happy to take your call at +49 (571) 887-44222.

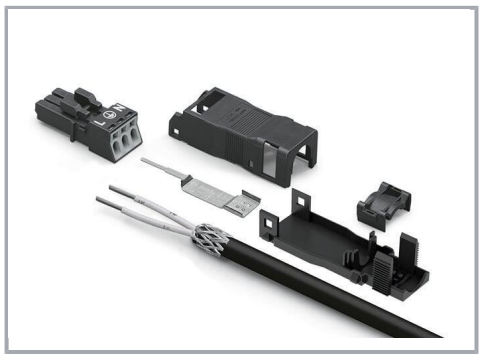

Connector with shield termination

Apply the shield to the sheathed cable.

Strip length, outer insulation = 30 mm

Shield length = 8 mm

Push the shield connecting plate into the connector until fully inserted.

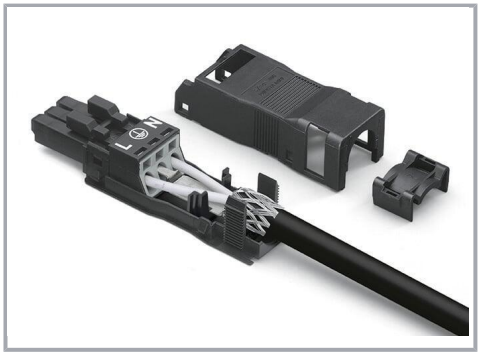

First insert the wired connector into strain relief housing, then snap clamp and cover.

Product family

WINSTA® MINI
Show all products from the family

WAGO GmbH & Co. KG
Hansastr. 27
32423 Minden
Phone: +49571 887-0 | Fax: +49571 887-169
Email: info.de@wago.com | Web: www.wago.com

Do you have any questions about our products?
We are always happy to take your call at +49 (571) 887-44222.