7-2176092-3 ✔ ACTIVE

Holsworthy | Holsworthy RP73

TE Internal #: 7-2176092-3

4.32K Ω, Thin Film, Precision Resistor, .1 %, 2 Termination, 0805, Taped & Reeled, .25 W, ±25 ppm/°C, Solder, 2 x 1.25 x .55 mm, Holsworthy RP73

View on TE.com >

Passive Components > Resistors > Surface Mount Resistors

Resistor Type: **Precision Resistor**

Number of Terminations: **2**

Package Size Code: **0805**

Packaging Method: **Taped & Reeled**

Passive Component Tolerance: **.1 %**

Features

Product Type Features

Product Type	Fixed Resistor
Resistor Type	Precision Resistor
Package Size Code	0805
Element Type	Thin Film

Configuration Features

Number of Resistors	1

Electrical Characteristics

Voltage Rating	150 V
Passive Component Tolerance	.1 %
Resistance Class	1kΩ – 1MΩ
Resistance Value	4.32K Ω
Power Rating	.25 W

Termination Features

Number of Terminations	2
Surface Mount Resistor Termination Type	Solder

Dimensions

Passive Component Dimensions	2 x 1.25 x .55 mm

Usage Conditions

Temperature Coefficient	±25 ppm/°C

Packaging Features

Packaging Method	Taped & Reeled

Product Compliance

For compliance documentation, visit the product page on TE.com>

EU RoHS Directive 2011/65/EU	Compliant
EU ELV Directive 2000/53/EC	Compliant
China RoHS 2 Directive MIIT Order No 32, 2016	No Restricted Materials Above Threshold
EU REACH Regulation (EC) No. 1907/2006	Current ECHA Candidate List: JUNE 2023 (235) Candidate List Declared Against: JUNE 2022 (224) Does not contain REACH SVHC
Halogen Content	Low Halogen - Br, Cl, F, I < 900 ppm per homogenous material. Also BFR/CFR/PVC Free
Solder Process Capability	Reflow solder capable to 260°C

Product Compliance Disclaimer

This information is provided based on reasonable inquiry of our suppliers and represents our current actual knowledge based on the information they provided. This information is subject to change. The part numbers that TE has identified as EU RoHS compliant have a maximum concentration of 0.1% by weight in homogenous materials for lead, hexavalent chromium, mercury, PBB, PBDE, DBP, BBP, DEHP, DIBP, and 0.01% for cadmium, or qualify for an exemption to these limits as defined in the Annexes of Directive 2011/65/EU (RoHS2). Finished electrical and electronic equipment products will be CE marked as required by Directive 2011/65/EU. Components may not be CE marked. Additionally, the part numbers that TE has identified as EU ELV compliant have a maximum concentration of 0.1% by weight in homogenous materials for lead, hexavalent chromium, and mercury, and 0.01% for cadmium, or qualify for an exemption to these limits as defined in the Annexes of Directive 2000/53/EC (ELV). Regarding the REACH Regulation, the information TE provides on SVHC in articles for this part number is based on the latest European Chemicals Agency (ECHA) 'Guidance on requirements for substances in articles' posted at this URL: https://echa.europa.eu/guidance-documents/guidance-on-reach

Compatible Parts

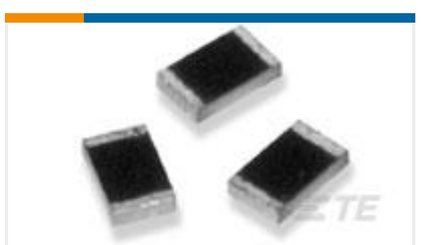

TE Part # 1625867-2
RP 1J 0.166W 10K 0.1% 25PPM 1K RL

TE Part # 2176093-5
RP 2A 0.25W 10K 0.1% 25PPM 1K RL

TE Part # 1-2176092-8
RP 2A 0.25W 1K0 0.1% 25PPM 1K RL

TE Part # 2176308-5
RP 1E 0.1W 147K 0.1% 25PPM 5K RL

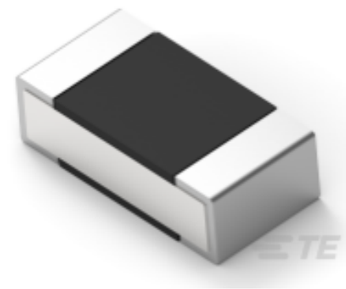

TE Part # 2-2176308-7
RP 1E 0.1W 249K 0.1% 25PPM 5K RL

Also in the Series | Holsworthy RP73

Surface Mount Resistors(4556)

Customers Also Bought

TE Part #2-2176230-6
3522 100R 5% 3W

TE Part #1676427-2
RN 0805 75K 0.1% 10PPM 1KRL

TE Part #350537-6
UMNL SOK 20-14 .0125 AUNI/PHBZ

TE Part #7-520366-2
ULTRAFAST 110 ASSY REC 26-22 TPBR LP

TE Part #6-2176091-3
RP 2A 0.25W 261R 0.1% 25PPM 1K RL

TE Part #4-2176092-8
RP 2A 0.25W 2K32 0.1% 25PPM 1K RL

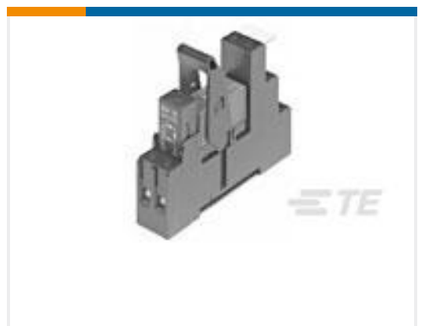

TE Part #1415074-1
RT4S5LC4

TE Part #3160753001
55A1121-24-6/9-9

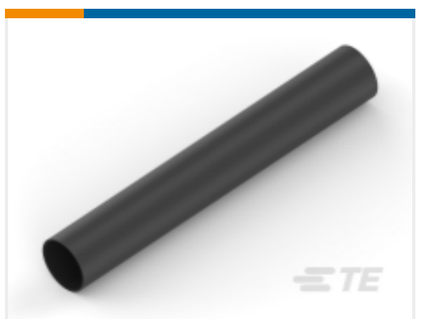

TE Part #NB08012001
HTAT-4/1-0-STK

Documents

CAD Files

3D PDF

3D

Customer View Model

ENG_CVM_CVM_7-2176092-3_BA.2d_dxf.zip

English

Customer View Model

ENG_CVM_CVM_7-2176092-3_BA.3d_igs.zip

English

Customer View Model

ENG_CVM_CVM_7-2176092-3_BA.3d_stp.zip

English

By downloading the CAD file I accept and agree to the Terms and Conditions of use.

Datasheets & Catalog Pages

RP73-0915

English

Product Environmental Compliance

Product Compliance

English

Product Compliance

English