TEXAS INSTRUMENTS
ISOW7740, ISOW7741, ISOW7742, ISOW7743, ISOW7744
SLLSFK1C – SEPTEMBER 2021 – REVISED APRIL 2022

ISOW774x Quad-Channel Digital Isolator with Integrated Low-Emissions, Low-Noise DC-DC Converter

1 Features

- 100 Mbps data rate
- Integrated DC-DC converter with low-emissions, low-noise
  - Emission optimized to meet CISPR 32 and EN 55032 Class B with >5 dB margin on 2 layer board
  - Low frequency power converter at 25 MHz enabling low noise performance
  - Low output ripple: 24 mV
- High efficiency output power
  - Efficiency at max load: 46%
  - Up to 0.55-W output power
  - V_{ISOOUT} accuracy of 5%
  - 5 V to 5 V: Max available load current = 110 mA
  - 5 V to 3.3 V: Max available load current = 140 mA
  - 3.3 V to 3.3 V: Max available load current = 60 mA
- Independent power supply for channel isolator & power converter
  - Logic supply (V_{IO}): 1.71-V to 5.5-V
  - Power converter supply (V_{DD}): 3-V to 5.5-V
- Robust electromagnetic compatibility (EMC)
  - System-level ESD, EFT, and surge immunity
  - ±8 kV IEC 61000-4-2 contact discharge protection across isolation barrier
- Reinforced and Basic isolation options
- High CMTI: 100-kV/µs (typical)
- Safety Related Certifications:
  - VDE reinforced and basic insulation per DIN VDE V 0884-11:2017-01
  - UL 1577 component recognition program
  - IEC 62368-1, IEC 61010-1, IEC 60601-1 and GB 4943.1-2011 certifications
  - ISOW774xB devices are planned
- Extended temperature range: –40°C to +125°C
- 20-pin wide body SOIC package

2 Applications

- Factory automation
- Motor control
- Grid infrastructure
- Medical equipment
- Test and measurement

3 Description

The ISOW77xx family of devices are galvanically-isolated quad-channel digital isolator with an integrated high-efficiency power converter with low emissions. The integrated DC-DC converter provides up to 550 mW of isolated power, eliminating the need for a separate isolated power supply in space-constrained isolated designs.

Device Information

FEATURE	ISOW774x ISOW774xF	ISOW774xB ISOW774xFB
Protection Level	Reinforced	Basic
Surge Test Voltage	10 kV_{PK}	7.8 kV_{PK}
Isolation Rating	5000 V_{RMS}	5000 V_{RMS}
Working Voltage	1000 V_{RMS}/ 1500V_{PK}	1000 V_{RMS}/ 1500V_{PK}
Package	DFM (20)	DFM (20)
Body Size (Nom)	12.83 mm × 7.5 mm	12.83 mm × 7.5 mm

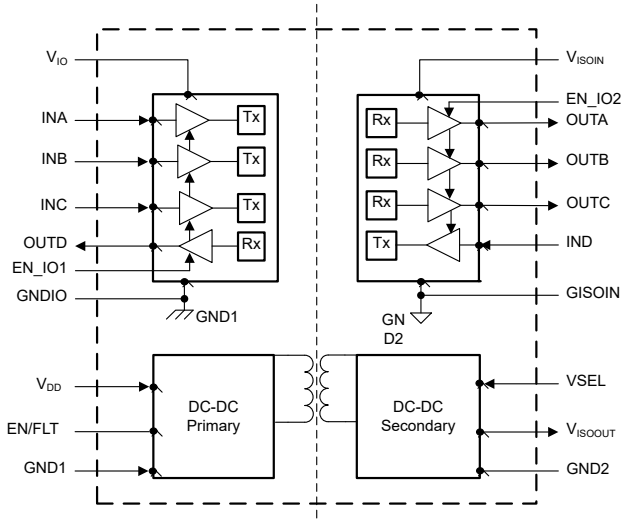

ISOW7741 Simplified Schematic

An IMPORTANT NOTICE at the end of this data sheet addresses availability, warranty, changes, use in safety-critical applications, intellectual property matters and other important disclaimers. PRODUCTION DATA.

Table of Contents

1 Features....1
2 Applications....1
3 Description....1
4 Revision History....2
5 Description (continued)....3
6 Pin Configuration and Functions....4
7 Specifications....8
7.1 Absolute Maximum Ratings....8
7.2 ESD Ratings....8
7.3 Recommended Operating Conditions....9
7.4 Thermal Information....10
7.5 Power Ratings....10
7.6 Insulation Specifications....11
7.7 Safety-Related Certifications....12
7.8 Safety Limiting Values....12
7.9 Electrical Characteristics - Power Converter....13
7.10 Supply Current Characteristics - Power Converter....14
7.11 Electrical Characteristics Channel Isolator - V_{IO}, V_{ISOIN} = 5-V....15
7.12 Supply Current Characteristics Channel Isolator - V_{IO}, V_{ISOIN} = 5-V....15
7.13 Electrical Characteristics Channel Isolator - V_{IO}, V_{ISOIN} = 3.3-V....18
7.14 Supply Current Characteristics Channel Isolator - V_{IO}, V_{ISOIN} = 3.3-V....18
7.15 Electrical Characteristics Channel Isolator - V_{IO}, V_{ISOIN} = 2.5-V....21
7.16 Supply Current Characteristics Channel Isolator - V_{IO}, V_{ISOIN} = 2.5-V....21
7.17 Electrical Characteristics Channel Isolator - V_{IO}, V_{ISOIN} = 1.8-V....24
7.18 Supply Current Characteristics Channel Isolator - V_{IO}, V_{ISOIN} = 1.8-V....24
7.19 Switching Characteristics - 5-V Supply....27
7.20 Switching Characteristics - 3.3-V Supply....28
7.21 Switching Characteristics - 2.5-V Supply....29
7.22 Switching Characteristics - 1.8-V Supply....30
7.23 Insulation Characteristics Curves....31
7.24 Typical Characteristics....32
8 Parameter Measurement Information....38
9 Detailed Description....40
9.1 Overview....40
9.2 Functional Block Diagram....41
9.3 Feature Description....42
9.4 Device Functional Modes....45
10 Application and Implementation....47
10.1 Application Information....47
10.2 Typical Application....47
11 Power Supply Recommendations....51
12 Layout....52
12.1 Layout Guidelines....52
12.2 Layout Example....53
13 Device and Documentation Support....54
13.1 Device Support....54
13.2 Documentation Support....54
13.3 Receiving Notification of Documentation Updates....54
13.4 Support Resources....54
13.5 Trademarks....54
13.6 Electrostatic Discharge Caution....54
13.7 Glossary....54
14 Mechanical, Packaging, and Orderable Information....55

4 Revision History

NOTE: Page numbers for previous revisions may differ from page numbers in the current version.

Changes from Revision B (January 2022) to Revision C (April 2022)	Page
• Added ISOW7740, ISOW7742, ISOW7743 and ISOW7744 Typical Characteristics	32

Changes from Revision A (October 2021) to Revision B (January 2022)	Page
• Added ISOW7740, ISOW7742, ISOW7743, and ISOW7744 to data sheet	1

Changes from Revision * (September 2021) to Revision A (October 2021)	Page
• Updated device status to Production Data	1

Copyright © 2023 Texas Instruments Incorporated

5 Description (continued)

The high-efficiency of the power converter allows for operation at a wide operating ambient temperature range of –40°C to +125°C. This device provides improved emissions performance, allowing for simplified board design and has provisions for ferrite beads to further attenuate emissions. The ISOW774x has been designed with enhanced protection features in mind, including soft-start to limit inrush current, over-voltage and under-voltage lock out, fault detection on the EN/FLT pin, overload and short-circuit protection, and thermal shutdown.

The ISOW77xx family of devices provide high electromagnetic immunity while isolating CMOS or LVCMOS digital I/Os. The signal-isolation channel has a logic input and output buffer separated by a double capacitive silicon dioxide (SiO_2) insulation barrier, whereas, power isolation uses on-chip transformers separated by thin film polymer as insulating material. There are five orderable configurations of four channel ISOW77xx flavor using the last part number digit to note the number of reverse channels. For example, the ISOW7740 has 4 forward channels and 0 reverse channels, while the ISOW7743 would have 1 forward channel and 3 reverse channels. If the input signal is lost, the default output is high for the ISOW77xx devices without the F suffix and low for the ISOW77xx devices with the F suffix. The ISOW774x can operate from a single supply voltage of 3 V to 5.5 V by connecting V_{IO} and V_{DD} together on PCB. If lower logic levels are required, these devices support 1.71 V to 5.5 V logic supply (V_{IO}) that can be independent from the power converter supply (V_{DD}) of 3 V to 5.5 V. V_{ISOIN} and V_{ISOOUT} needs to be connected on board with either a ferrite bead or fed through a LDO.

These devices help prevent noise currents on data buses, such as UART, SPI, RS-485, RS-232, and CAN, or other circuits from entering the local ground and interfering with or damaging sensitive circuitry. Through innovative chip design and layout techniques, electromagnetic compatibility of the device has been significantly enhanced to ease system-level ESD, EFT, surge and emissions compliance. The device is available in a 20-pin SOIC wide-body (SOIC-WB) DFM package.

Copyright © 2023 Texas Instruments Incorporated

6 Pin Configuration and Functions

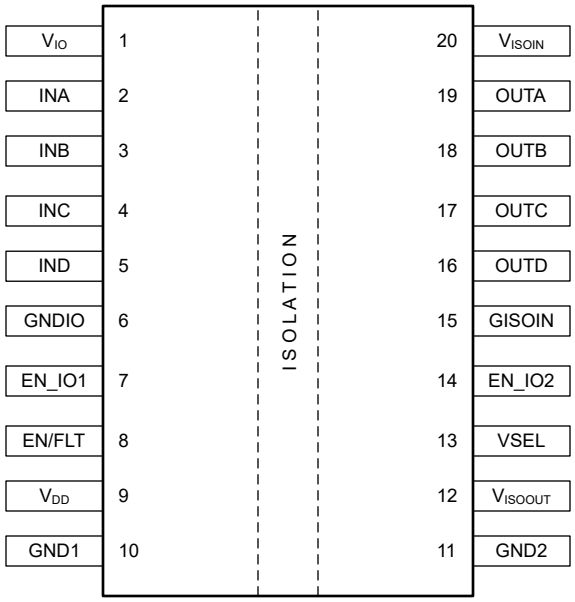

Figure 6-1. ISOW7740 DFM Package 20-Pin SOIC-WB Top View

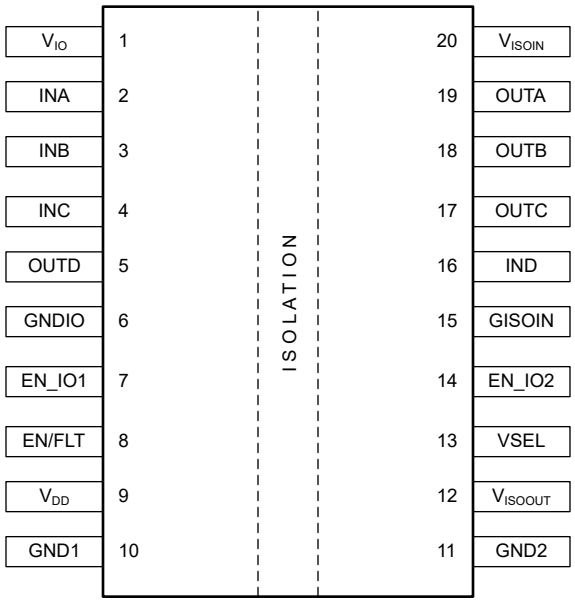

Figure 6-2. ISOW7741 DFM Package 20-Pin SOIC-WB Top View

Copyright © 2023 Texas Instruments Incorporated

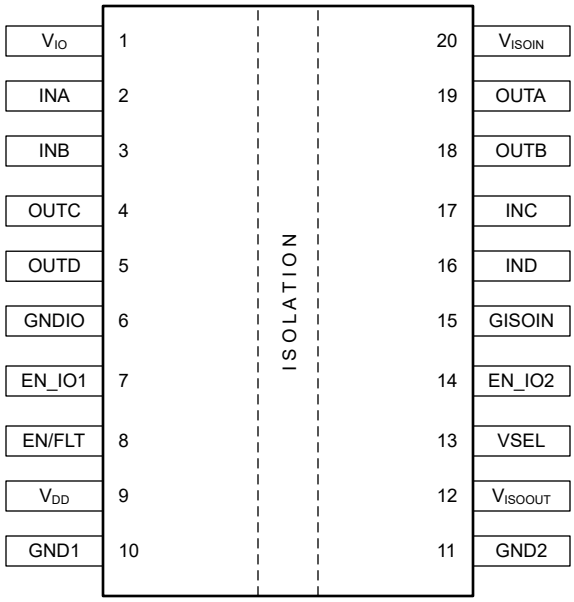

Figure 6-3. ISOW7742 DFM Package 20-Pin SOIC-WB Top View

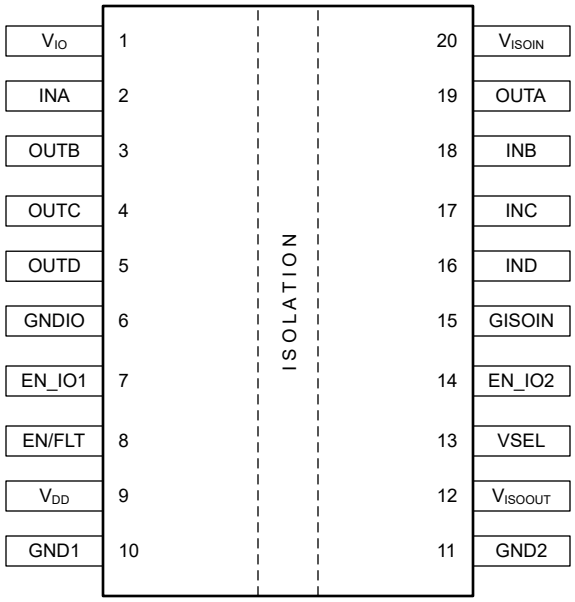

Figure 6-4. ISOW7743 DFM Package 20-Pin SOIC-WB Top View

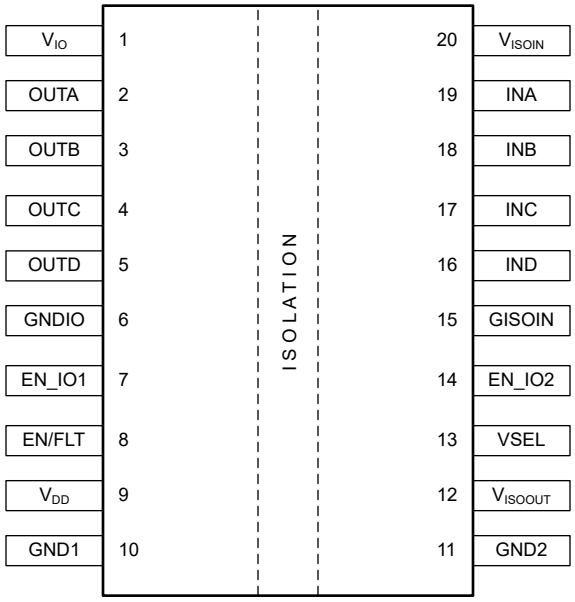

Figure 6-5. ISOW7744 DFM Package 20-Pin SOIC-WB Top View

PIN						I/O	DESCRIPTION
NAME	NO.						
	ISOW7740	ISOW7741	ISOW7742	ISOW7743	ISOW7744		
GNDIO	6	6	6	6	6	—	Ground connection for V_{IO}. GND1 and GNDIO needs to be shorted on board.
GND1	10	10	10	10	10	—	Ground connection for V_{DD}. GND1 and GNDIO needs to be shorted on board.
GND2	11	11	11	11	11	—	Ground connection for V_{ISOOUT}. GND2 and GISOIN pins can be shorted on board or connected through a ferrite bead. See the Layout Section for more information.
GISOIN	15	15	15	15	15	—	Ground connection for V_{ISOIN}. GND2 and GISOIN pins can be shorted on board or connected through a ferrite bead. See the Layout Section for more information.
INA	2	2	2	2	19	I	Input channel A

Copyright © 2023 Texas Instruments Incorporated

PIN						I/O	DESCRIPTION
NAME	NO.						
	ISOW7740	ISOW7741	ISOW7742	ISOW7743	ISOW7744		
INB	3	3	3	18	18	I	Input channel B
INC	4	4	17	17	17	I	Input channel C
IND	5	16	16	16	16	I	Input channel D
OUTA	19	19	19	19	2	O	Output channel A
OUTB	18	18	18	3	3	O	Output channel B
OUTC	17	17	4	4	4	O	Output channel C
OUTD	16	5	5	5	5	O	Output channel D
EN_IO1	7	7	7	7	7	I	Output Enable 1: When EN_IO1 is high or open then the channel output pins on side 1 are enabled. When EN_IO1 is low then the channel output pins on side 1 are in a high impedance state and the transmitter of the channel input pins on side 1 are disabled.
EN_IO2	14	14	14	14	14	I	Output Enable 2: When EN_IO2 is high or open then the channel output pins on side 2 are enabled. When EN_IO2 is low then the channel output pins on side 2 are in a high impedance state and the transmitter of the channel input pins on side 2 are disabled.
EN/FLT	8	8	8	8	8	I/O	Multi-function power converter enable input pin or fault output pin. Can only be used as either an input pin or an output pin. Power converter enable input pin: enables and disables the integrated DC-DC power converter. Connect directly to microcontroller or through a series current limiting resistor to use as an enable input pin. DC-DC power converted is enabled when EN/FLT is high to the V_{IO} voltage level and disabled when low at GND1 voltage level. Fault output pin: Alert signal if power converter is not operating properly. This pin is active low. Connect to microcontroller through a 5 kΩ or greater pull-up resistor in order to use as a fault outpin pin. See Section 9.3.3 for more information
VSEL	13	13	13	13	13	I	V_{ISOOUT} selection pin. V_{ISOOUT} = 5 V when VSEL shorted to V_{ISOOUT}. V_{ISOOUT} = 3.3 V, when VSEL shorted to GND2. For more information see the Device Functional Modes.
V_{IO}	1	1	1	1	1	—	Side 1 logic supply.
V_{DD}	9	9	9	9	9	—	Side 1 DC-DC converter power supply.
V_{ISOIN}	20	20	20	20	20	—	Side 2 supply voltage for isolation channels. V_{ISOIN} and V_{ISOOUT} pins can be shorted on board or connected through a ferrite bead. See Application and Implementation for more information.
V_{ISOOUT}	12	12	12	12	12	—	Isolated power converter output voltage. V_{ISOIN} and V_{ISOOUT} pins can be shorted on board or connected through a ferrite bead. See Application and Implementation for more information.

Copyright © 2023 Texas Instruments Incorporated

7 Specifications

7.1 Absolute Maximum Ratings

over operating free-air temperature range (unless otherwise noted)[(1) (2)]

		MIN	MAX	UNIT
V_{DD}	Power converter supply voltage	–0.5	6	V
V_{ISOIN}	Isolated supply voltage, input supply for secondary side isolation channels	–0.5	6	V
V_{ISOOUT}	Isolated supply voltage, Power converter output VSEL shorted to GND2	–0.5	4	V
V_{ISOOUT}	Isolated supply voltage, Power converter output V_{SEL} shorted to V_{ISOOUT}	–0.5	6	V
V_{IO}	Primary side logic supply voltage	–0.5	6	V
V	Voltage at INx, OUTx, EN_IOx[(3)]	–0.5	V_{SI} + 0.5	V
	Voltage at EN/FLT	–0.5	V_{SI} + 0.5	V
	Voltage at VSEL	–0.5	V_{ISOOUT} + 0.5	V
I_O	Maximum output current through data channels	–15	15	mA
T_J	Junction temperature	–40	150	°C
T_{stg}	Storage temperature	–65	150	°C

(1) Stresses beyond those listed under *Absolute Maximum Rating* may cause permanent damage to the device. These are stress ratings only, which do not imply functional operation of the device at these or any other conditions beyond those indicated under *Recommended Operating Condition*. Exposure to absolute-maximum-rated conditions for extended periods may affect device reliability.
(2) V_{DD}, V_{ISOIN} V_{ISOOUT}, and V_{IO} are with respect to the local ground pin (GND1 or GND2). All voltage values except differential I/O bus voltages are peak voltage values.
(3) V_{SI} = input side supply; Cannot exceed 6 V.

7.2 ESD Ratings

			VALUE	UNIT
$V_{(ESD)}$	Electrostatic discharge	Human-body model (HBM), per AEC Q100-002[(1)] HBM ESD Classification Level 2	±3000	V
		Charged-device model (CDM), per AEC Q100-011 CDM ESD Classification Level C6	±1500	
		Contact discharge per IEC 61000-4-2[(2)] Isolation barrier withstand test	±8000	

(1) AEC Q100-002 indicates that HBM stressing shall be in accordance with the ANSI/ESDA/JEDEC JS-001 specification.
(2) IEC ESD strike is applied across the barrier with all pins on each side tied together creating a two-terminal device.

Copyright © 2023 Texas Instruments Incorporated

7.3 Recommended Operating Conditions

Over recommended operating conditions, typical values are at VDD = V_{IO} = 3.3 V and T_A =25°C, GND1 = GNDIO, GND2 = GISOIN (unless otherwise noted)

			MIN	NOM	MAX	UNIT
Power Converter						
V_{DD}	Power converter supply voltage	3.3 V operation	2.97	3.3	3.63	V
		5 V operation	4.5	5	5.5	V
$V_{DD(UVLO+)}$	Positive threshold when power converter supply is rising	Positive threshold when power converter supply is rising		2.7	2.95	V
$V_{DD(UVLO-)}$	Positive threshold when power converter supply is falling	Positive threshold when power converter supply is falling	2.40	2.55		V
$V_{DD(HYS)}$	Power converter supply voltage hysteresis	Power converter supply voltage hysteresis	0.15			V
Channel Isolation						
V_{IO}, V_{ISOIN} [(3)]	Channel logic supply voltage	1.8 V operation	1.71		1.89	V
		2.5 V, 3.3 V, and 5 V operation	2.25		5.5	V
$V_{IO(UVLO+)}$	Rising threshold of logic supply voltage			1.55	1.7	V
$V_{IO(UVLO-)}$	Falling threshold of logic supply voltage		1.0	1.41		V
$V_{IO(HYS)}$	Logic supply voltage hysteresis		75			mV
I_{OH}	High level output current[(1)]	V_{ISOIN} = 5 V	–4			mA
		V_{ISOIN} = 3.3 V	–2			mA
		V_{ISOIN} = 2.5 V	–1			mA
		V_{ISOIN} = 1.8 V	–1			mA
I_{OL}	Low level output current[(1)]	V_{ISOIN} = 5 V			4	mA
		V_{ISOIN} = 3.3 V			2	mA
		V_{ISOIN} = 2.5 V			1	mA
		V_{ISOIN} = 1.8 V			1	mA
V_{IH}	High-level input voltage[(2)]		0.7 × V_{SI}		V_{SI}	V
V_{IL}	Low-level input voltage		0		0.3 × V_{SI}	V
DR	Data rate				100	Mbps
t_{PWRUP}	Channel isolator ready after power up or EN/FLT high	V_{ISOIN} > $V_{IO(UVLO+)}$		5		ms
T_A	Ambient temperature		–40		125	°C

(1) This current is for data output channel.
(2) V_{SI} = input side supply; V_{SO} = output side supply
(3) The channel outputs are in undetermined state when 1.89 V < V_{SI} < 2.25 V and 1.05 V < V_{SI} < 1.71 V

7.4 Thermal Information

THERMAL METRIC[1]		ISOW774x DFM (SOIC) 20 PINS	UNIT
$R_{\theta JA}$	Junction-to-ambient thermal resistance	68.5	°C/W
$R_{\theta JC(top)}$	Junction-to-case (top) thermal resistance	24.6	°C/W
$R_{\theta JB}$	Junction-to-board thermal resistance	53.7	°C/W
Ψ_{JT}	Junction-to-top characterization parameter	17.1	°C/W
Ψ_{JB}	Junction-to-board characterization parameter	50.9	°C/W
$R_{\theta JC(bot)}$	Junction-to-case (bottom) thermal resistance	—	°C/W

(1) For more information about traditional and new thermal metrics, see the *Semiconductor and IC Package Thermal Metrics* application report.

7.5 Power Ratings

$V_{DD} = V_{IO} = 5.5$ V, $I_{ISO} = 110$ mA, $T_J = 150$°C, $T_A \leq 80$°C, $C_L = 15$ pF, input a 50-MHz 50% duty-cycle square wave

PARAMETER		TEST CONDITIONS	MIN	TYP	MAX	UNIT
P_D	Maximum power dissipation (both sides)	$V_{DD} = 5.5$ V, $V_{IO} = 5.5$ V, $V_{ISOOUT} = V_{ISOIN}$, $I_{ISOOUT} = 100$ mA, $T_J = 150$°C, $T_A \leq 80$°C, $C_L = 15$ pF, input a 50-MHz 50% duty-cycle square wave			1.48	W
P_{D1}	Maximum power dissipation (side-1)				0.74	W
P_{D2}	Maximum power dissipation (side-2)				0.74	W

Copyright © 2023 Texas Instruments Incorporated

7.6 Insulation Specifications

PARAMETER		TEST CONDITIONS	VALUE	UNIT
GENERAL				
CLR	External clearance[1]	Shortest terminal-to-terminal distance through air	>8	mm
CPG	External creepage[1]	Shortest terminal-to-terminal distance across the package surface	>8	mm
DTI	Distance through the insulation	Minimum internal gap (internal clearance – capacitive signal isolation)	> 17	µm
		Minimum internal gap (internal clearance – transformer power isolation)	>120	
CTI	Comparative tracking index	DIN EN 60112 (VDE 0303-11); IEC 60112	> 600	V
	Material group	According to IEC 60664-1	I	
	Overvoltage category per IEC 60664-1	Rated mains voltage ≤ 300 V_{RMS}	I-IV	
		Rated mains voltage ≤ 600 V_{RMS}	I-IV	
		Rated mains voltage ≤ 1000 V_{RMS}	I-III	
DIN VDE V 0884-11:2017-01[2]				
V_{IORM}	Maximum repetitive peak isolation voltage	AC voltage (bipolar)	1500	V_{PK}
V_{IOWM}	Maximum working isolation voltage	AC voltage; Time dependent dielectric breakdown (TDDB) Test	1000	V_{RMS}
		DC voltage	1500	V_{DC}
V_{IOTM}	Maximum transient isolation voltage	$V_{TEST} = V_{IOTM}$; t = 60 s (qualification); $V_{TEST} = 1.2 \times V_{IOTM}$; t = 1 s (100% production)	7071	V_{PK}
V_{IOSM}	Maximum surge isolation voltage ISOW774x[(3)]	Test method per IEC 62368-1, 1.2/50 µs waveform, $V_{TEST} = 1.6 \times V_{IOSM}$ = 10000 V_{PK}(qualification)	6250	V_{PK}
V_{IOSM}	Maximum surge isolation voltage ISOW774xB[(3)]	Test method per IEC 62368-1, 1.2/50 µs waveform, $V_{TEST} = 1.3 \times V_{IOSM}$ = 7800 V_{PK}(qualification)	6000	V_{PK}
q_{pd}	Apparent charge[4]	Method a, after input/output safety test subgroup 2/3, $V_{ini} = V_{IOTM}$, t_{ini} = 60 s; $V_{pd(m)} = 1.2 \times V_{IORM}$, t_m = 10 s	≤ 5	pC
		Method a, after environmental tests subgroup 1, $V_{ini} = V_{IOTM}$, t_{ini} = 60 s; ISOW774x: $V_{pd(m)} = 1.6 \times V_{IORM}$, t_m = 10 s, ISOW774xB: $V_{pd(m)} = 1.2 \times V_{IORM}$, t_m = 10 s	≤ 5	
		Method b1, at routine test (100% production) and preconditioning (type test), $V_{ini} = 1.2 \times V_{IOTM}$, t_{ini} = 1 s; ISOW774x: $V_{pd(m)} = 1.875 \times V_{IORM}$, t_m = 1 s, ISOW774xB: $V_{pd(m)} = 1.5 \times V_{IORM}$, t_m = 1 s	≤ 5	
C_{IO}	Barrier capacitance, input to output[5]	$V_{IO} = 0.4 \times \sin(2\pi ft)$, f = 1 MHz	~3.5	pF
R_{IO}	Insulation resistance[5]	V_{IO} = 500 V, T_A = 25°C	> 10^{12}	Ω
		V_{IO} = 500 V, 100°C ≤ T_A ≤ 125°C	> 10^{11}	
		V_{IO} = 500 V, T_S = 150°C	> 10^{9}	
	Pollution degree		2	
	Climatic category		40/125/21	
UL 1577				
$V_{ISO(UL)}$	Withstand isolation voltage	$V_{TEST} = V_{ISO(UL)}$= 5000 V_{RMS}, t = 60 s (qualification), $V_{TEST} = 1.2 \times V_{ISO(UL)}$ = 6000 V_{RMS}, t = 1 s (100% production)	5000	V_{RMS}

(1) Creepage and clearance requirements should be applied according to the specific equipment isolation standards of an application. Care should be taken to maintain the creepage and clearance distance of a board design to ensure that the mounting pads of the isolator on the printed-circuit board do not reduce this distance. Creepage and clearance on a printed-circuit board become equal in certain cases. Techniques such as inserting grooves, ribs, or both on a printed circuit board are used to help increase these specifications.

Copyright © 2023 Texas Instruments Incorporated

(2) ISOW77xx is suitable for *safe electrical insulation* and ISOW77xxB is suitable for *basic electrical insulation* only within the safety ratings.. Compliance with the safety ratings shall be ensured by means of suitable protective circuits.
(3) Testing is carried out in air or oil to determine the intrinsic surge immunity of the isolation barrier.
(4) Apparent charge is electrical discharge caused by a partial discharge (pd).
(5) All pins on each side of the barrier tied together creating a two-terminal device.

7.7 Safety-Related Certifications

VDE	CSA	UL	CQC	TUV
Certified according to DIN VDE V 0884-11:2017-01	Certified according to IEC 62368-1, and IEC 60601-1	Recognized under UL 1577 Component Recognition Program	Certified according to GB 4943.1-2011	Certified according to EN 61010-1:2010/A1:2019 and EN 62368-1:2014
Reinforced insulation; Maximum transient isolation voltage, 7071 V_{PK}; Maximum repetitive peak isolation voltage, 1500 V_{PK}; Maximum surge isolation voltage, 6250 V_{PK} for ISOW774x (Reinforced), 6000 V_{PK} for ISOW774xB (Basic).	CSA 62368-1-19 and IEC 62368-1:2018 Ed. 3 and EN 62368-1:2020. (pollution degree 2, material group I) 600 V_{RMS} (ISOW774x Reinforced), 1000V_{RMS} (ISOW774xB Basic) maximum working voltage; 2 MOPP (Means of Patient Protection) per CSA 60601-1:14 and IEC 60601-1 Ed. 3+A1, 250 V_{RMS} maximum working voltage. Temperature rating is 90°C for reinforced insulation and 125°C for basic insulation; see certificate for details.	Single protection, 5000 V_{RMS}	Reinforced Insulation, Altitude ≤ 5000 m, Tropical Climate, 700 V_{RMS} maximum working voltage;	5000 V_{RMS} Reinforced insulation per EN 61010-1:2010 up to working voltage of 600 V_{RMS}; 5000 V_{RMS} Reinforced insulation per EN 62368-1:2014 up to working voltage of 600 V_{RMS} (ISOW774x Reinforced), 1000 V_{RMS} (ISOW774xB Basic)
Certificate #: Reinforced: 40040142 Basic: 40047657	Master Contract#: 220991	File #: E181974	Certificate #: CQC21001297517	Client ID: 77311

7.8 Safety Limiting Values

Safety limiting intends to minimize potential damage to the isolation barrier upon failure of input or output circuitry.

PARAMETER		TEST CONDITIONS	MIN	TYP	MAX	UNIT
I_S	Safety input, output, or supply current(1)	$R_{\theta JA}$ = 68.5°C/W, V_I = 5.5 V, T_J = 150°C, T_A = 25°C			332	mA
		$R_{\theta JA}$ = 68.5°C/W, V_I = 3.6 V, T_J = 150°C, T_A = 25°C			507	
P_S	Safety input, output, or total power(1)	$R_{\theta JA}$ = 68.5°C/W, T_J = 150°C, T_A = 25°C			1825	mW
T_S	Maximum safety temperature(1)				150	°C

(1) The maximum safety temperature, T_S, has the same value as the maximum junction temperature, T_J, specified for the device. The I_S and P_S parameters represent the safety current and safety power respectively. The maximum limits of I_S and P_S should not be exceeded. These limits vary with the ambient temperature, T_A.
The junction-to-air thermal resistance, $R_{\theta JA}$, in the Thermal Information table is that of a device installed on a high-K test board for leaded surface-mount packages. Use the following equations to calculate the value for each parameter:
$T_J = T_A + R_{\theta JA} \times P$, where P is the power dissipated in the device.
$T_{J(max)} = T_S = T_A + R_{\theta JA} \times P_S$, where $T_{J(max)}$ is the maximum allowed junction temperature.
$P_S = I_S \times V_I$, where V_I is the maximum input voltage.

Copyright © 2023 Texas Instruments Incorporated

7.9 Electrical Characteristics - Power Converter

V_{DD} = 5 V ±10% or 3.3 V ±10% and V_{ISOIN} power externally, GND1 = GNDIO, GND2 = GISOIN (over recommended operating conditions, unless otherwise specified)

PARAMETER		TEST CONDITIONS	MIN	TYP	MAX	UNIT
V_{DD} = 5 V, V_{ISOOUT} = 5 V, V_{SEL} = V_{ISOOUT}						
V_{ISOOUT}	Isolated supply voltage	External I_{ISOOUT} = 0 to 55 mA	4.75	5	5.25	V
V_{ISOOUT}	Isolated supply voltage	External I_{ISOOUT} = 0 to 110 mA	4.5	5	5.25	V
$V_{ISOOUT(LINE)}$	DC line regulation	I_{ISOOUT} = 55 mA, V_{DD} = 4.5 V to 5.5 V		2		mV/V
$V_{ISOOUT(LOAD)}$	DC load regulation	I_{ISOOUT} = 0 to 110 mA		1%		
EFF	Efficiency at maximum load current ((3))	I_{ISOOUT} = 110 mA, C_{LOAD} = 0.01 µF || 10 µF; V_I = V_{DD} (ISOW774x); V_I =0 V (ISOW774x with F suffix).		46%		
$V_{ISOOUT(RIP)}$	Output ripple on isolated supply (pk-pk)	20-MHz bandwidth, C_{LOAD} = 0.01 µF || 20 µF, I_{ISOOUT} = 110 mA		24		mV
I_{ISOOUT_SC}	DC current from V_{DD} supply under short circuit on V_{ISOOUT}	V_{ISOOUT} shorted to GND2		250		mA
V_{DD} = 5 V, V_{ISOOUT} = 3.3 V, V_{SEL} = GND2						
V_{ISOOUT}	Isolated supply voltage	External I_{ISOOUT} = 0 to 70 mA	3.135	3.3	3.465	V
V_{ISOOUT}	Isolated supply voltage	External I_{ISOOUT} = 0 to 140 mA	3.135	3.3	3.465	V
$V_{ISOOUT(LINE)}$	DC line regulation	I_{ISOOUT} = 70 mA, V_{DD} = 4.5 V to 5.5 V		2		mV/V
$V_{ISOOUT(LOAD)}$	DC load regulation	I_{ISOOUT} = 0 to 140 mA		1%		
EFF	Efficiency at maximum load current ((3))	I_{ISOOUT} = 140 mA, C_{LOAD} = 0.01 µF || 10 µF; V_I = V_{DD} (ISOW774x); V_I =0 V (ISOW774x with F suffix).		36%		
$V_{ISOOUT(RIP)}$	Output ripple on isolated supply (pk-pk)	20-MHz bandwidth , C_{LOAD} = 0.01 µF || 20 µF, I_{ISOOUT} = 110 mA		30		mV
I_{ISOOUT_SC}	DC current from V_{DD} supply under short circuit on V_{ISOOUT}	V_{ISOOUT} shorted to GND2		250		mA
V_{DD} = 3.3 V, V_{ISOOUT} = 3.3 V, V_{SEL} = GND2						
V_{ISOOUT}	Isolated supply voltage	External I_{ISOOUT} = 0 to 30 mA	3.135	3.3	3.465	V
V_{ISOOUT}	Isolated supply voltage	External I_{ISOOUT} = 0 to 60 mA	3.135	3.3	3.465	V
$V_{ISOOUT(LINE)}$	DC line regulation	I_{ISOOUT} = 30 mA, V_{DD} = 3.0 V to 3.6 V		2		mV/V
$V_{ISOOUT(LOAD)}$	DC load regulation	I_{ISOOUT} = 0 to 60 mA		1%		
EFF	Efficiency at maximum load current ((3))	I_{ISOOUT} = 60 mA, C_{LOAD} = 0.01 µF || 10 µF; V_I = V_{DD} (ISOW774x); V_I =0 V (ISOW774x with F suffix).		43%		
$V_{ISOOUT(RIP)}$	Output ripple on isolated supply (pk-pk)	20-MHz bandwidth, C_{LOAD} = 0.01 µF || 20 µF, I_{ISOOUT} = 60 mA		14		mV
I_{ISOOUT_SC}	DC current from V_{DD} supply under short circuit on V_{ISOOUT}	V_{ISOOUT} shorted to GND2		185		mA

(1) Power converter I_{LOAD} = current required to power the secondary side. I_{LOAD} does not take into account the channel isolator current. See Supply Current Characteristics Channel Isolator section for details.

Copyright © 2023 Texas Instruments Incorporated

7.10 Supply Current Characteristics - Power Converter

V_{DD} = 5 V ±10% or 3.3 V ±10% GND1 = GNDIO, GND2 = GISOIN (over recommended operating conditions unless otherwise noted).

PARAMETER	TEST CONDITIONS		SUPPLY CURRENT	MIN	TYP	MAX	UNIT
Power Converter Disabled							
Power converter supply current	EN/FLT = GND1, V_{ISOOUT} = No I_{LOAD}		I_{DD}		0.28	0.45	mA
Logic supply current	EN/FLT = GND1		I_{IO}		0.27	0.57	mA
Power Converter Enabled							
Power converter supply current input	V_{DD} = 5 V, V_{SEL} = V_{ISOOUT}	I_{LOAD} = 55 mA	I_{DD}		115	171	mA
	V_{DD} = 5 V, V_{SEL} = V_{ISOOUT}	I_{LOAD} = 110 mA			225	316	mA
	V_{DD} = 5 V, V_{SEL} = GND2	I_{LOAD} = 70 mA			127	169	mA
	V_{DD} = 5 V, V_{SEL} = GND2	I_{LOAD} = 140 mA			250	310	mA
	V_{DD} = 3.3 V, V_{SEL} = GND2	I_{LOAD} = 30 mA			74	112	mA
	V_{DD} = 3.3 V, V_{SEL} = GND2	I_{LOAD} = 60 mA			143	216	mA
Power converter output current ((1))	V_{DD} = 5 V	V_{SEL} = V_{ISOOUT}	I_{ISOOUT}	110			mA
	V_{DD} = 5 V	V_{SEL} = GND2		140			mA
	V_{DD} = 3.3 V	V_{SEL} = GND2		60			mA

(1) I_{LOAD} does not take into account the channel isolator current. See Supply Current Characteristics Channel Isolator section for details.

Copyright © 2023 Texas Instruments Incorporated

7.11 Electrical Characteristics Channel Isolator - V_{IO}, V_{ISOIN} = 5-V

V_{IO}, V_{ISOIN} = 5 V ±10% GND1 = GNDIO, GND2 = GISOIN (over recommended operating conditions, unless otherwise specified)

PARAMETER		TEST CONDITIONS	MIN	TYP	MAX	UNIT
Channel Isolation						
V_{ITH}	Input pin rising threshold				0.7 x V_{SI}	V
V_{ITL}	Input pin falling threshold		0.3 x V_{SI}			V
$V_{I(HYS)}$	Input pin threshold hysteresis (INx)		0.1 x V_{SI}			V
I_{IL}	Low level input current	V_{IL} = 0 at INx	–25			µA
I_{IH}	High level input current	V_{IH} = V_{SI} (1) at INx			25	µA
V_{OH}	High level output voltage	I_O = –4 mA, see Switching Characteristics Test Circuit and Voltage Waveforms	V_{SO} (1) – 0.4			V
V_{OL}	Low level output voltage	I_O = 4 mA, see Switching Characteristics Test Circuit and Voltage Waveforms			0.4	V
CMTI	Common mode transient immunity	V_I = V_{SI} or 0 V, V_{CM} = 1000 V; see Common-Mode Transient Immunity Test Circuit	85	100		kV/us

(1) V_{SI} = input side supply; V_{SO} = output side supply

7.12 Supply Current Characteristics Channel Isolator - V_{IO}, V_{ISOIN} = 5-V

V_{IO}, V_{ISOIN} = 5 V ±10% GND1 = GNDIO, GND2 = GISOIN (over recommended operating conditions, unless otherwise specified)

PARAMETER	TEST CONDITIONS		SUPPLY CURRENT	MIN	TYP	MAX	UNIT
ISOW7740 Channel Supply Current							
Supply current - Disable	EN_IO1 = EN_IO2 = 0 V; V_I = V_{CCI} (1) (ISOW7740); V_I = 0 V (ISOW7740 with F suffix)		I_{DD_IO}		2.5	3.6	mA
			I_{ISOIN}		4.6	6.9	mA
	EN_IO1 = EN_IO2 = 0 V; V_I = 0 V (ISOW7740); V_I = V_{CCI} (ISOW7740 with F suffix)		I_{DD_IO}		2.5	3.6	mA
			I_{ISOIN}		4.6	6.9	mA
Channel Supply current - DC signal	EN_IO1 = EN_IO2 = V_{CCI}; V_I = V_{CCI} (ISOW7740); V_I = 0 V (ISOW7740 with F suffix)		I_{DD_IO}		2.5	3.6	mA
			I_{ISOIN}		4.6	6.9	mA
	EN_IO1 = EN_IO2 = V_{CCI}; V_I = 0 V (ISOW7740); V_I = V_{CCI} (ISOW7740 with F suffix)		I_{DD_IO}		6.9	9.2	mA
			I_{ISOIN}		4.8	7.2	mA
Channel Supply current - AC signal	All channels switching with square wave clock input; C_L = 15 pF	1 Mbps	I_{DD_IO}		4.7	6.4	mA
			I_{ISOIN}		4.8	7	mA
		10 Mbps	I_{DD_IO}		4.9	6.7	mA
			I_{ISOIN}		7.3	9.7	mA
		100 Mbps	I_{DD_IO}		6.5	8.4	mA
			I_{ISOIN}		31	35	mA
ISOW7741 Channel Supply Current							
Supply current - Disable	EN_IO1 = EN_IO2 = 0 V; V_I = V_{CCI} (1) (ISOW7741); V_I = 0 V (ISOW7741 with F suffix)		I_{DD_IO}		2.8	4.1	mA
			I_{ISOIN}		4.3	6.3	mA
	EN_IO1 = EN_IO2 = 0 V; V_I = 0 V (ISOW7741); V_I = V_{CCI} (ISOW7741 with F suffix)		I_{DD_IO}		2.8	4.1	mA
			I_{ISOIN}		4.3	6.3	mA
Channel Supply current - DC signal	EN_IO1 = EN_IO2 = V_{CCI}; V_I = V_{CCI} (ISOW7741); V_I = 0 V (ISOW7741 with F suffix)		I_{DD_IO}		2.8	4.1	mA
			I_{ISOIN}		4.3	6.3	mA
	EN_IO1 = EN_IO2 = V_{CCI}; V_I = 0 V (ISOW7741); V_I = V_{CCI} (ISOW7741 with F suffix)		I_{DD_IO}		6.1	8.4	mA
			I_{ISOIN}		5.5	7.9	mA

Copyright © 2023 Texas Instruments Incorporated

V_{IO}, V_{ISOIN} = 5 V ±10% GND1 = GNDIO, GND2 = GISOIN (over recommended operating conditions, unless otherwise specified)

PARAMETER	TEST CONDITIONS		SUPPLY CURRENT	MIN	TYP	MAX	UNIT
Channel Supply current - AC signal	All channels switching with square wave clock input; C_L = 15 pF	1 Mbps	I_{DD_IO}		4.4	6.3	mA
			I_{ISOIN}		4.9	7.1	mA
		10 Mbps	I_{DD_IO}		5	7	mA
			I_{ISOIN}		6.3	8.9	mA
		100 Mbps	I_{DD_IO}		12.2	14.2	mA
			I_{ISOIN}		25	32	mA
ISOW7742 Channel Supply Current							
Supply current - Disable	EN_IO1 = EN_IO2 = 0 V; V_I = V_{CCI} (1) (ISOW7742); V_I = 0 V (ISOW7742 with F suffix)		I_{DD_IO}		3.1	4.7	mA
			I_{ISOIN}		3.9	5.6	mA
	EN_IO1 = EN_IO2 = 0 V; V_I = 0 V (ISOW7742); V_I = V_{CCI} (ISOW7742 with F suffix)		I_{DD_IO}		3.1	4.7	mA
			I_{ISOIN}		3.9	5.6	mA
Channel Supply current - DC signal	EN_IO1 = EN_IO2 = V_{CCI}; V_I = V_{CCI} (ISOW7742); V_I = 0 V (ISOW7742 with F suffix)		I_{DD_IO}		3.1	4.7	mA
			I_{ISOIN}		3.9	5.6	mA
	EN_IO1 = EN_IO2 = V_{CCI}; V_I = 0 V (ISOW7742); V_I = V_{CCI} (ISOW7742 with F suffix)		I_{DD_IO}		5.4	7.7	mA
			I_{ISOIN}		6.2	8.5	mA
Channel Supply current - AC signal	All channels switching with square wave clock input; C_L = 15 pF	1 Mbps	I_{DD_IO}		4.2	6.3	mA
			I_{ISOIN}		5.1	7.2	mA
		10 Mbps	I_{DD_IO}		5.5	7.6	mA
			I_{ISOIN}		6.3	8.3	mA
		100 Mbps	I_{DD_IO}		16.7	20	mA
			I_{ISOIN}		17.33	22	mA
ISOW7743 Channel Supply Current							
Supply current - Disable	EN_IO1 = EN_IO2 = 0 V; V_I = V_{CCI} (1) (ISOW7743); V_I = 0 V (ISOW7743 with F suffix)		I_{DD_IO}		3.5	5.2	mA
			I_{ISOIN}		3.6	5.1	mA
	EN_IO1 = EN_IO2 = 0 V; V_I = 0 V (ISOW7743); V_I = V_{CCI} (ISOW7743 with F suffix)		I_{DD_IO}		3.5	5.2	mA
			I_{ISOIN}		3.6	5.1	mA
Channel Supply current - DC signal	EN_IO1 = EN_IO2 = V_{CCI}; V_I = V_{CCI} (ISOW7743); V_I = 0 V (ISOW7743 with F suffix)		I_{DD_IO}		3.5	5.2	mA
			I_{ISOIN}		3.6	5.1	mA
	EN_IO1 = EN_IO2 = V_{CCI}; V_I = 0 V (ISOW7743); V_I = V_{CCI} (ISOW7743 with F suffix)		I_{DD_IO}		4.7	6.9	mA
			I_{ISOIN}		7	9.4	mA
Channel Supply current - AC signal	All channels switching with square wave clock input; C_L = 15 pF	1 Mbps	I_{DD_IO}		4	6.2	mA
			I_{ISOIN}		5.3	7.2	mA
		10 Mbps	I_{DD_IO}		6	8.2	mA
			I_{ISOIN}		6.2	8	mA
		100 Mbps	I_{DD_IO}		24	27	mA
			I_{ISOIN}		14	17	mA
ISOW7744 Channel Supply Current							
Supply current - Disable	EN_IO1 = EN_IO2 = 0 V; V_I = V_{CCI} (1) (ISOW7744); V_I = 0 V (ISOW7744 with F suffix)		I_{DD_IO}		3.8	5.8	mA
			I_{ISOIN}		3.3	4.6	mA
	EN_IO1 = EN_IO2 = 0 V; V_I = 0 V (ISOW7744); V_I = V_{CCI} (ISOW7744 with F suffix)		I_{DD_IO}		3.8	5.8	mA
			I_{ISOIN}		3.3	4.6	mA

Copyright © 2023 Texas Instruments Incorporated

V_{IO}, V_{ISOIN} = 5 V ±10% GND1 = GNDIO, GND2 = GISOIN (over recommended operating conditions, unless otherwise specified)

PARAMETER	TEST CONDITIONS		SUPPLY CURRENT	MIN	TYP	MAX	UNIT
Channel Supply current - DC signal	EN_IO1 = EN_IO2 = V_{CCI}; V_I = V_{CCI} (ISOW7744); V_I = 0 V (ISOW7744 with F suffix)		I_{DD_IO}		3.8	5.8	mA
			I_{ISOIN}		3.3	4.6	mA
	EN_IO1 = EN_IO2 = V_{CCI}; V_I = 0 V (ISOW7744); V_I = V_{CCI} (ISOW7744 with F suffix)		I_{DD_IO}		4	6.2	mA
			I_{ISOIN}		7.7	10.2	mA
Channel Supply current - AC signal	All channels switching with square wave clock input; C_L = 15 pF	1 Mbps	I_{DD_IO}		3.8	6.1	mA
			I_{ISOIN}		5.5	7.3	mA
		10 Mbps	I_{DD_IO}		6.4	8.6	mA
			I_{ISOIN}		5.6	7.3	mA
		100 Mbps	I_{DD_IO}		30	34	mA
			I_{ISOIN}		7.4	9	mA

(1) V_{CCI} = V_{IO} or V_{ISOIN}

Copyright © 2023 Texas Instruments Incorporated

7.13 Electrical Characteristics Channel Isolator - V_{IO}, V_{ISOIN} = 3.3-V

V_{IO}, V_{ISOIN} = 3.3 V ±10% GND1 = GNDIO, GND2 = GISOIN (over recommended operating conditions, unless otherwise specified)

PARAMETER		TEST CONDITIONS	MIN	TYP	MAX	UNIT
Channel Isolation						
V_{ITH}	Input pin rising threshold				0.7 x V_{SI}	V
V_{ITL}	Input pin falling threshold		0.3 x V_{SI}			V
$V_{I(HYS)}$	Input pin threshold hysteresis (INx)		0.1 x V_{SI}			V
I_{IL}	Low level input current	V_{IL} = 0 at INx	-25			µA
I_{IH}	High level input current	V_{IH} = V_{SI} (1) at INx			25	µA
V_{OH}	High level output voltage	I_O = –2 mA, see Switching Characteristics Test Circuit and Voltage Waveforms	V_{SO} (1) – 0.3			V
V_{OL}	Low level output voltage	I_O = 2 mA, see Switching Characteristics Test Circuit and Voltage Waveforms			0.3	V
CMTI	Common mode transient immunity	V_I = V_{SI} or 0 V, V_{CM} = 1000 V; see Common-Mode Transient Immunity Test Circuit	85	100		kV/us

(1) V_{SI} = input side supply; V_{SO} = output side supply

7.14 Supply Current Characteristics Channel Isolator - V_{IO}, V_{ISOIN} = 3.3-V

V_{IO}, V_{ISOIN} = 3.3 V ±10% GND1 = GNDIO, GND2 = GISOIN (over recommended operating conditions, unless otherwise specified)

PARAMETER	TEST CONDITIONS		SUPPLY CURRENT	MIN	TYP	MAX	UNIT
ISOW7740 Channel Supply Current							
Supply current - Disable	EN_IO1 = EN_IO2 = 0 V; V_I = V_{CCI} (1) (ISOW7740); V_I = 0 V (ISOW7740 with F suffix)		I_{DD_IO}		2.4	3.5	mA
			I_{ISOIN}		4.6	6.9	mA
	EN_IO1 = EN_IO2 = 0 V; V_I = 0 V (ISOW7740); V_I = V_{CCI} (ISOW7740 with F suffix)		I_{DD_IO}		2.4	3.5	mA
			I_{ISOIN}		4.5	6.9	mA
Channel Supply current - DC signal	EN_IO1 = EN_IO2 = V_{CCI}; V_I = V_{CCI} (ISOW7740); V_I = 0 V (ISOW7740 with F suffix)		I_{DD_IO}		2.4	3.5	mA
			I_{ISOIN}		4.5	6.9	mA
	EN_IO1 = EN_IO2 = V_{CCI}; V_I = 0 V (ISOW7740); V_I = V_{CCI} (ISOW7740 with F suffix)		I_{DD_IO}		6.8	9.1	mA
			I_{ISOIN}		4.8	7.2	mA
Channel Supply current - AC signal	All channels switching with square wave clock input; C_L = 15 pF	1 Mbps	I_{DD_IO}		4.6	6.4	mA
			I_{ISOIN}		4.7	7	mA
		10 Mbps	I_{DD_IO}		4.7	6.4	mA
			I_{ISOIN}		6	8.6	mA
		100 Mbps	I_{DD_IO}		5.5	7.8	mA
			I_{ISOIN}		22	30	mA
ISOW7741 Channel Supply Current							
Supply current - Disable	EN_IO1 = EN_IO2 = 0 V; V_I = V_{CCI} (1) (ISOW7741); V_I = 0 V (ISOW7741 with F suffix)		I_{DD_IO}		2.8	4	mA
			I_{ISOIN}		4.2	6.3	mA
	EN_IO1 = EN_IO2 = 0 V; V_I = 0 V (ISOW7741); V_I = V_{CCI} (ISOW7741 with F suffix)		I_{DD_IO}		2.8	4	mA
			I_{ISOIN}		4.2	6.3	mA
Channel Supply current - DC signal	EN_IO1 = EN_IO2 = V_{CCI}; V_I = V_{CCI} (ISOW7741); V_I = 0 V (ISOW7741 with F suffix)		I_{DD_IO}		2.8	4	mA
			I_{ISOIN}		4.2	6.3	mA
	EN_IO1 = EN_IO2 = V_{CCI}; V_I = 0 V (ISOW7741); V_I = V_{CCI} (ISOW7741 with F suffix)		I_{DD_IO}		6.1	8.3	mA
			I_{ISOIN}		5.5	7.9	mA

Copyright © 2023 Texas Instruments Incorporated

V_{IO}, V_{ISOIN} = 3.3 V ±10% GND1 = GNDIO, GND2 = GISOIN (over recommended operating conditions, unless otherwise specified)

PARAMETER	TEST CONDITIONS		SUPPLY CURRENT	MIN	TYP	MAX	UNIT
Channel Supply current - AC signal	All channels switching with square wave clock input; C_L = 15 pF	1 Mbps	I_{DD_IO}		4.4	6.3	mA
			I_{ISOIN}		4.9	7.1	mA
		10 Mbps	I_{DD_IO}		4.8	6.7	mA
			I_{ISOIN}		5.9	8.3	mA
		100 Mbps	I_{DD_IO}		9.4	12	mA
			I_{ISOIN}		17.5	25	mA
ISOW7742 Channel Supply Current							
Supply current - Disable	EN_IO1 = EN_IO2 = 0 V; V_I = V_{CCI} (1) (ISOW7742); V_I = 0 V (ISOW7742 with F suffix)		I_{DD_IO}		3.1	4.6	mA
			I_{ISOIN}		3.9	5.5	mA
	EN_IO1 = EN_IO2 = 0 V; V_I = 0 V (ISOW7742); V_I = V_{CCI} (ISOW7742 with F suffix)		I_{DD_IO}		3.1	4.6	mA
			I_{ISOIN}		3.9	5.5	mA
Channel Supply current - DC signal	EN_IO1 = EN_IO2 = V_{CCI}; V_I = V_{CCI} (ISOW7742); V_I = 0 V (ISOW7742 with F suffix)		I_{DD_IO}		3.1	4.6	mA
			I_{ISOIN}		3.9	5.5	mA
	EN_IO1 = EN_IO2 = V_{CCI}; V_I = 0 V (ISOW7742); V_I = V_{CCI} (ISOW7742 with F suffix)		I_{DD_IO}		5.4	7.6	mA
			I_{ISOIN}		6.2	8.5	mA
Channel Supply current - AC signal	All channels switching with square wave clock input; C_L = 15 pF	1 Mbps	I_{DD_IO}		4.2	6.3	mA
			I_{ISOIN}		5.1	7.2	mA
		10 Mbps	I_{DD_IO}		4.9	7	mA
			I_{ISOIN}		5.7	7.9	mA
		100 Mbps	I_{DD_IO}		13	16.6	mA
			I_{ISOIN}		13.7	17.5	mA
ISOW7743 Channel Supply Current							
Supply current - Disable	EN_IO1 = EN_IO2 = 0 V; V_I = V_{CCI} (1) (ISOW7743); V_I = 0 V (ISOW7743 with F suffix)		I_{DD_IO}		3.4	5.1	mA
			I_{ISOIN}		3.6	5	mA
	EN_IO1 = EN_IO2 = 0 V; V_I = 0 V (ISOW7743); V_I = V_{CCI} (ISOW7743 with F suffix)		I_{DD_IO}		3.4	5.1	mA
			I_{ISOIN}		3.6	5	mA
Channel Supply current - DC signal	EN_IO1 = EN_IO2 = V_{CCI}; V_I = V_{CCI} (ISOW7743); V_I = 0 V (ISOW7743 with F suffix)		I_{DD_IO}		3.4	5.1	mA
			I_{ISOIN}		3.6	5	mA
	EN_IO1 = EN_IO2 = V_{CCI}; V_I = 0 V (ISOW7743); V_I = V_{CCI} (ISOW7743 with F suffix)		I_{DD_IO}		4.7	6.8	mA
			I_{ISOIN}		6.9	9.3	mA
Channel Supply current - AC signal	All channels switching with square wave clock input; C_L = 15 pF	1 Mbps	I_{DD_IO}		4	6.2	mA
			I_{ISOIN}		5.3	7.2	mA
		10 Mbps	I_{DD_IO}		5	7.4	mA
			I_{ISOIN}		5.6	7.6	mA
		100 Mbps	I_{DD_IO}		17	23	mA
			I_{ISOIN}		10.5	14	mA
ISOW7744 Channel Supply Current							
Supply current - Disable	EN_IO1 = EN_IO2 = 0 V; V_I = V_{CCI} (1) (ISOW7744); V_I = 0 V (ISOW7744 with F suffix)		I_{DD_IO}		3.7	5.7	mA
			I_{ISOIN}		3.2	4.5	mA
	EN_IO1 = EN_IO2 = 0 V; V_I = 0 V (ISOW7744); V_I = V_{CCI} (ISOW7744 with F suffix)		I_{DD_IO}		3.7	5.7	mA
			I_{ISOIN}		3.2	4.5	mA

Copyright © 2023 Texas Instruments Incorporated

V_{IO}, V_{ISOIN} = 3.3 V ±10% GND1 = GNDIO, GND2 = GISOIN (over recommended operating conditions, unless otherwise specified)

PARAMETER	TEST CONDITIONS		SUPPLY CURRENT	MIN	TYP	MAX	UNIT
Channel Supply current - DC signal	EN_IO1 = EN_IO2 = V_{CCI}; V_I = V_{CCI} (ISOW7744); V_I = 0 V (ISOW7744 with F suffix)		I_{DD_IO}		3.7	5.7	mA
			I_{ISOIN}		3.2	4.5	mA
	EN_IO1 = EN_IO2 = V_{CCI}; V_I = 0 V (ISOW7744); V_I = V_{CCI} (ISOW7744 with F suffix)		I_{DD_IO}		4	6.1	mA
			I_{ISOIN}		7.6	10.1	mA
Channel Supply current - AC signal	All channels switching with square wave clock input; C_L = 15 pF	1 Mbps	I_{DD_IO}		3.8	6.1	mA
			I_{ISOIN}		5.5	7.3	mA
		10 Mbps	I_{DD_IO}		5.5	7.8	mA
			I_{ISOIN}		5.5	7.3	mA
		100 Mbps	I_{DD_IO}		21	29	mA
			I_{ISOIN}		6.3	8.3	mA

(1) V_{CCI} = V_{IO} or V_{ISOIN}

Copyright © 2023 Texas Instruments Incorporated

7.15 Electrical Characteristics Channel Isolator - V_{IO}, V_{ISOIN} = 2.5-V

V_{IO}, V_{ISOIN} = 2.5 V ±10% GND1 = GNDIO, GND2 = GISOIN (over recommended operating conditions, unless otherwise specified)

PARAMETER		TEST CONDITIONS	MIN	TYP	MAX	UNIT
Channel Isolation						
V_{ITH}	Input pin rising threshold				0.7 x V_{SI}	V
V_{ITL}	Input pin falling threshold		0.3 x V_{SI}			V
$V_{I(HYS)}$	Input pin threshold hysteresis (INx)		0.1 x V_{SI}			V
I_{IL}	Low level input current	V_{IL} = 0 at INx	-25			µA
I_{IH}	High level input current	V_{IH} = V_{SI} (1) at INx			25	µA
V_{OH}	High level output voltage	I_O = –1 mA, see Switching Characteristics Test Circuit and Voltage Waveforms	V_{SO} (1) – 0.1			V
V_{OL}	Low level output voltage	I_O = 1 mA, see Switching Characteristics Test Circuit and Voltage Waveforms			0.1	V
CMTI	Common mode transient immunity	V_I = V_{SI} or 0 V, V_{CM} = 1000 V; see Common-Mode Transient Immunity Test Circuit	85	100		kV/us

(1) V_{SI} = input side supply; V_{SO} = output side supply

7.16 Supply Current Characteristics Channel Isolator - V_{IO}, V_{ISOIN} = 2.5-V

V_{IO}, V_{ISOIN} = 2.5 V ±10% GND1 = GNDIO, GND2 = GISOIN (over recommended operating conditions, unless otherwise specified)

PARAMETER	TEST CONDITIONS		SUPPLY CURRENT	MIN	TYP	MAX	UNIT
ISOW7740 Channel Supply Current							
Supply current - Disable	EN_IO1 = EN_IO2 = 0 V; V_I = V_{CCI} (1) (ISOW7740); V_I = 0 V (ISOW7740 with F suffix)		I_{DD_IO}		2.4	3.8	mA
			I_{ISOIN}		4.5	6.9	mA
	EN_IO1 = EN_IO2 = 0 V; V_I = 0 V (ISOW7740); V_I = V_{CCI} (ISOW7740 with F suffix)		I_{DD_IO}		2.4	3.8	mA
			I_{ISOIN}		4.5	6.9	mA
Channel Supply current - DC signal	EN_IO1 = EN_IO2 = V_{CCI}; V_I = V_{CCI} (ISOW7740); V_I = 0 V (ISOW7740 with F suffix)		I_{DD_IO}		2.4	3.8	mA
			I_{ISOIN}		4.5	6.9	mA
	EN_IO1 = EN_IO2 = V_{CCI}; V_I = 0 V (ISOW7740); V_I = V_{CCI} (ISOW7740 with F suffix)		I_{DD_IO}		6.8	9	mA
			I_{ISOIN}		4.7	7.2	mA
Channel Supply current - AC signal	All channels switching with square wave clock input; C_L = 15 pF	1 Mbps	I_{DD_IO}		4.6	6.4	mA
			I_{ISOIN}		4.7	7	mA
		10 Mbps	I_{DD_IO}		4.7	6.4	mA
			I_{ISOIN}		5.7	8.1	mA
		100 Mbps	I_{DD_IO}		5.3	7.2	mA
			I_{ISOIN}		18	24	mA
ISOW7741 Channel Supply Current							
Supply current - Disable	EN_IO1 = EN_IO2 = 0 V; V_I = V_{CCI} (1) (ISOW7741); V_I = 0 V (ISOW7741 with F suffix)		I_{DD_IO}		2.7	4.3	mA
			I_{ISOIN}		4.2	6.3	mA
	EN_IO1 = EN_IO2 = 0 V; V_I = 0 V (ISOW7741); V_I = V_{CCI} (ISOW7741 with F suffix)		I_{DD_IO}		2.7	4.3	mA
			I_{ISOIN}		4.2	6.3	mA
Channel Supply current - DC signal	EN_IO1 = EN_IO2 = V_{CCI}; V_I = V_{CCI} (ISOW7741); V_I = 0 V (ISOW7741 with F suffix)		I_{DD_IO}		2.7	4.3	mA
			I_{ISOIN}		4.2	6.3	mA
	EN_IO1 = EN_IO2 = V_{CCI}; V_I = 0 V (ISOW7741); V_I = V_{CCI} (ISOW7741 with F suffix)		I_{DD_IO}		6.1	8.3	mA
			I_{ISOIN}		5.4	7.9	mA

Copyright © 2023 Texas Instruments Incorporated

V_{IO}, V_{ISOIN} = 2.5 V ±10% GND1 = GNDIO, GND2 = GISOIN (over recommended operating conditions, unless otherwise specified)

PARAMETER	TEST CONDITIONS		SUPPLY CURRENT	MIN	TYP	MAX	UNIT
Channel Supply current - AC signal	All channels switching with square wave clock input; C_L = 15 pF	1 Mbps	I_{DD_IO}		4.4	6.3	mA
			I_{ISOIN}		4.9	7.1	mA
		10 Mbps	I_{DD_IO}		4.7	8.3	mA
			I_{ISOIN}		5.6	7.9	mA
		100 Mbps	I_{DD_IO}		8.2	11.2	mA
			I_{ISOIN}		14.6	18.8	mA
ISOW7742 Channel Supply Current							
Supply current - Disable	EN_IO1 = EN_IO2 = 0 V; V_I = V_{CCI} (1) (ISOW7742); V_I = 0 V (ISOW7742 with F suffix)		I_{DD_IO}		3.1	4.6	mA
			I_{ISOIN}		3.8	5.5	mA
	EN_IO1 = EN_IO2 = 0 V; V_I = 0 V (ISOW7742); V_I = V_{CCI} (ISOW7742 with F suffix)		I_{DD_IO}		3.1	4.6	mA
			I_{ISOIN}		3.8	5.5	mA
Channel Supply current - DC signal	EN_IO1 = EN_IO2 = V_{CCI}; V_I = V_{CCI} (ISOW7742); V_I = 0 V (ISOW7742 with F suffix)		I_{DD_IO}		3.1	4.6	mA
			I_{ISOIN}		3.8	5.4	mA
	EN_IO1 = EN_IO2 = V_{CCI}; V_I = 0 V (ISOW7742); V_I = V_{CCI} (ISOW7742 with F suffix)		I_{DD_IO}		5.3	7.5	mA
			I_{ISOIN}		6.1	8.4	mA
Channel Supply current - AC signal	All channels switching with square wave clock input; C_L = 15 pF	1 Mbps	I_{DD_IO}		4.2	6.3	mA
			I_{ISOIN}		5.1	7.2	mA
		10 Mbps	I_{DD_IO}		4.7	6.8	mA
			I_{ISOIN}		5.6	7.7	mA
		100 Mbps	I_{DD_IO}		10.9	14.5	mA
			I_{ISOIN}		11.7	15.5	mA
ISOW7743 Channel Supply Current							
Supply current - Disable	EN_IO1 = EN_IO2 = 0 V; V_I = V_{CCI} (1) (ISOW7743); V_I = 0 V (ISOW7743 with F suffix)		I_{DD_IO}		3.4	5.1	mA
			I_{ISOIN}		3.5	4.9	mA
	EN_IO1 = EN_IO2 = 0 V; V_I = 0 V (ISOW7743); V_I = V_{CCI} (ISOW7743 with F suffix)		I_{DD_IO}		3.4	5.1	mA
			I_{ISOIN}		3.5	4.9	mA
Channel Supply current - DC signal	EN_IO1 = EN_IO2 = V_{CCI}; V_I = V_{CCI} (ISOW7743); V_I = 0 V (ISOW7743 with F suffix)		I_{DD_IO}		3.4	5.1	mA
			I_{ISOIN}		3.5	4.9	mA
	EN_IO1 = EN_IO2 = V_{CCI}; V_I = 0 V (ISOW7743); V_I = V_{CCI} (ISOW7743 with F suffix)		I_{DD_IO}		4.6	6.7	mA
			I_{ISOIN}		6.8	9.3	mA
Channel Supply current - AC signal	All channels switching with square wave clock input; C_L = 15 pF	1 Mbps	I_{DD_IO}		4	6.2	mA
			I_{ISOIN}		5.3	7.2	mA
		10 Mbps	I_{DD_IO}		4.8	7	mA
			I_{ISOIN}		5.6	7.5	mA
		100 Mbps	I_{DD_IO}		13.8	17	mA
			I_{ISOIN}		8.3	13	mA
ISOW7744 Channel Supply Current							
Supply current - Disable	EN_IO1 = EN_IO2 = 0 V; V_I = V_{CCI} (1) (ISOW7744); V_I = 0 V (ISOW7744 with F suffix)		I_{DD_IO}		3.7	5.9	mA
			I_{ISOIN}		3.2	4.4	mA
	EN_IO1 = EN_IO2 = 0 V; V_I = 0 V (ISOW7744); V_I = V_{CCI} (ISOW7744 with F suffix)		I_{DD_IO}		3.7	5.7	mA
			I_{ISOIN}		3.2	4.4	mA

Copyright © 2023 Texas Instruments Incorporated

V_{IO}, V_{ISOIN} = 2.5 V ±10% GND1 = GNDIO, GND2 = GISOIN (over recommended operating conditions, unless otherwise specified)

PARAMETER	TEST CONDITIONS		SUPPLY CURRENT	MIN	TYP	MAX	UNIT
Channel Supply current - DC signal	EN_IO1 = EN_IO2 = V_{CCI}; V_I = V_{CCI} (ISOW7744); V_I = 0 V (ISOW7744 with F suffix)		I_{DD_IO}		3.7	5.7	mA
			I_{ISOIN}		3.2	4.4	mA
	EN_IO1 = EN_IO2 = V_{CCI}; V_I = 0 V (ISOW7744); V_I = V_{CCI} (ISOW7744 with F suffix)		I_{DD_IO}		3.9	6.2	mA
			I_{ISOIN}		7.5	10	mA
Channel Supply current - AC signal	All channels switching with square wave clock input; C_L = 15 pF	1 Mbps	I_{DD_IO}		3.8	6.1	mA
			I_{ISOIN}		5.5	7.3	mA
		10 Mbps	I_{DD_IO}		4.8	7.2	mA
			I_{ISOIN}		5.5	7.3	mA
		100 Mbps	I_{DD_IO}		16.5	22	mA
			I_{ISOIN}		6	8.1	mA

(1) V_{CCI} = V_{IO} or V_{ISOIN}

7.17 Electrical Characteristics Channel Isolator - V_{IO}, V_{ISOIN} = 1.8-V

V_{IO}, V_{ISOIN} = 1.8 V ±5% GND1 = GNDIO, GND2 = GISOIN (over recommended operating conditions, unless otherwise specified)

PARAMETER		TEST CONDITIONS	MIN	TYP	MAX	UNIT
Channel Isolation						
V_{ITH}	Input pin rising threshold				0.7 x V_{SI}	V
V_{ITL}	Input pin falling threshold		0.3 x V_{SI}			V
$V_{I(HYS)}$	Input pin threshold hysteresis (INx)		0.1 x V_{SI}			V
I_{IL}	Low level input current	V_{IL} = 0 at INx	-25			µA
I_{IH}	High level input current	V_{IH} = V_{SI} (1) at INx			25	µA
V_{OH}	High level output voltage	I_O = –1 mA, see Switching Characteristics Test Circuit and Voltage Waveforms	V_{SO} (1) – 0.1			V
V_{OL}	Low level output voltage	I_O = 1 mA, see Switching Characteristics Test Circuit and Voltage Waveforms			0.1	V
CMTI	Common mode transient immunity	V_I = V_{SI} or 0 V, V_{CM} = 1000 V; see Common-Mode Transient Immunity Test Circuit	85	100		kV/us

(1) V_{SI} = input side supply; V_{SO} = output side supply

7.18 Supply Current Characteristics Channel Isolator - V_{IO}, V_{ISOIN} = 1.8-V

V_{IO}, V_{ISOIN} = 1.8 V ±5% GND1 = GNDIO, GND2 = GISOIN (over recommended operating conditions, unless otherwise specified)

PARAMETER	TEST CONDITIONS		SUPPLY CURRENT	MIN	TYP	MAX	UNIT
ISOW7740 Channel Supply Current							
Supply current - Disable	EN_IO1 = EN_IO2 = 0 V; V_I = V_{CCI} (1) (ISOW7740); V_I = 0 V (ISOW7740 with F suffix)		I_{DD_IO}		1.9	3	mA
			I_{ISOIN}		4.2	6.3	mA
	EN_IO1 = EN_IO2 = 0 V; V_I = 0 V (ISOW7740); V_I = V_{CCI} (ISOW7740 with F suffix)		I_{DD_IO}		1.9	3	mA
			I_{ISOIN}		4.2	6.3	mA
Channel Supply current - DC signal	EN_IO1 = EN_IO2 = V_{CCI}; V_I = V_{CCI} (ISOW7740); V_I = 0 V (ISOW7740 with F suffix)		I_{DD_IO}		1.9	3	mA
			I_{ISOIN}		4.2	6.3	mA
	EN_IO1 = EN_IO2 = V_{CCI}; V_I = 0 V (ISOW7740); V_I = V_{CCI} (ISOW7740 with F suffix)		I_{DD_IO}		6.1	8.7	mA
			I_{ISOIN}		4.4	6.7	mA
Channel Supply current - AC signal	All channels switching with square wave clock input; C_L = 15 pF	1 Mbps	I_{DD_IO}		4.0	6.4	mA
			I_{ISOIN}		4.7	7	mA
		10 Mbps	I_{DD_IO}		4.0	6.4	mA
			I_{ISOIN}		5.4	7.7	mA
		100 Mbps	I_{DD_IO}		4.6	9.5	mA
			I_{ISOIN}		14.6	19	mA
ISOW7741 Channel Supply Current							
Supply current - Disable	EN_IO1 = EN_IO2 = 0 V; V_I = V_{CCI} (1) (ISOW7741); V_I = 0 V (ISOW7741 with F suffix)		I_{DD_IO}		2.4	3.6	mA
			I_{ISOIN}		3.8	5.6	mA
	EN_IO1 = EN_IO2 = 0 V; V_I = 0 V (ISOW7741); V_I = V_{CCI} (ISOW7741 with F suffix)		I_{DD_IO}		2.4	3.6	mA
			I_{ISOIN}		3.8	5.6	mA
Channel Supply current - DC signal	EN_IO1 = EN_IO2 = V_{CCI}; V_I = V_{CCI} (ISOW7741); V_I = 0 V (ISOW7741 with F suffix)		I_{DD_IO}		2.4	3.6	mA
			I_{ISOIN}		3.8	5.6	mA
	EN_IO1 = EN_IO2 = V_{CCI}; V_I = 0 V (ISOW7741); V_I = V_{CCI} (ISOW7741 with F suffix)		I_{DD_IO}		5.5	7.8	mA
			I_{ISOIN}		4.9	7.3	mA

Copyright © 2023 Texas Instruments Incorporated

V_{IO}, V_{ISOIN} = 1.8 V ±5% GND1 = GNDIO, GND2 = GISOIN (over recommended operating conditions, unless otherwise specified)

PARAMETER	TEST CONDITIONS		SUPPLY CURRENT	MIN	TYP	MAX	UNIT
Channel Supply current - AC signal	All channels switching with square wave clock input; C_L = 15 pF	1 Mbps	I_{DD_IO}		4	5.7	mA
			I_{ISOIN}		4.4	6.5	mA
		10 Mbps	I_{DD_IO}		4.2	6	mA
			I_{ISOIN}		5.2	7.3	mA
		100 Mbps	I_{DD_IO}		6.9	9.6	mA
			I_{ISOIN}		12	15.8	mA
ISOW7742 Channel Supply Current							
Supply current - Disable	EN_IO1 = EN_IO2 = 0 V; V_I = V_{CCI} (1) (ISOW7742); V_I = 0 V (ISOW7742 with F suffix)		I_{DD_IO}		2.8	4.3	mA
			I_{ISOIN}		3.4	5.1	mA
	EN_IO1 = EN_IO2 = 0 V; V_I = 0 V (ISOW7742); V_I = V_{CCI} (ISOW7742 with F suffix)		I_{DD_IO}		2.8	4.3	mA
			I_{ISOIN}		3.4	5.1	mA
Channel Supply current - DC signal	EN_IO1 = EN_IO2 = V_{CCI}; V_I = V_{CCI} (ISOW7742); V_I = 0 V (ISOW7742 with F suffix)		I_{DD_IO}		2.8	4.3	mA
			I_{ISOIN}		3.4	5.1	mA
	EN_IO1 = EN_IO2 = V_{CCI}; V_I = 0 V (ISOW7742); V_I = V_{CCI} (ISOW7742 with F suffix)		I_{DD_IO}		5	7.4	mA
			I_{ISOIN}		5.6	8.1	mA
Channel Supply current - AC signal	All channels switching with square wave clock input; C_L = 15 pF	1 Mbps	I_{DD_IO}		4.2	6.3	mA
			I_{ISOIN}		4.5	7.2	mA
		10 Mbps	I_{DD_IO}		4.3	6.6	mA
			I_{ISOIN}		5.0	7.5	mA
		100 Mbps	I_{DD_IO}		9.1	12.5	mA
			I_{ISOIN}		9.7	13.3	mA
ISOW7743 Channel Supply Current							
Supply current - Disable	EN_IO1 = EN_IO2 = 0 V; V_I = V_{CCI} (1) (ISOW7743); V_I = 0 V (ISOW7743 with F suffix)		I_{DD_IO}		3.2	5	mA
			I_{ISOIN}		3	4.5	mA
	EN_IO1 = EN_IO2 = 0 V; V_I = 0 V (ISOW7743); V_I = V_{CCI} (ISOW7743 with F suffix)		I_{DD_IO}		3.2	5	mA
			I_{ISOIN}		3	4.5	mA
Channel Supply current - DC signal	EN_IO1 = EN_IO2 = V_{CCI}; V_I = V_{CCI} (ISOW7743); V_I = 0 V (ISOW7743 with F suffix)		I_{DD_IO}		3.2	5	mA
			I_{ISOIN}		3	4.5	mA
	EN_IO1 = EN_IO2 = V_{CCI}; V_I = 0 V (ISOW7743); V_I = V_{CCI} (ISOW7743 with F suffix)		I_{DD_IO}		4.4	6.6	mA
			I_{ISOIN}		6.2	8.9	mA
Channel Supply current - AC signal	All channels switching with square wave clock input; C_L = 15 pF	1 Mbps	I_{DD_IO}		4	6.2	mA
			I_{ISOIN}		4.6	7.2	mA
		10 Mbps	I_{DD_IO}		4.6	6.7	mA
			I_{ISOIN}		4.9	7.4	mA
		100 Mbps	I_{DD_IO}		11.4	15	mA
			I_{ISOIN}		7.8	9.8	mA
ISOW7744 Channel Supply Current							
Supply current - Disable	EN_IO1 = EN_IO2 = 0 V; V_I = V_{CCI} (1) (ISOW7744); V_I = 0 V (ISOW7744 with F suffix)		I_{DD_IO}		3.6	5.7	mA
			I_{ISOIN}		2.6	3.8	mA
	EN_IO1 = EN_IO2 = 0 V; V_I = 0 V (ISOW7744); V_I = V_{CCI} (ISOW7744 with F suffix)		I_{DD_IO}		3.6	5.7	mA
			I_{ISOIN}		2.6	3.8	mA

Copyright © 2023 Texas Instruments Incorporated

V_{IO}, V_{ISOIN} = 1.8 V ±5% GND1 = GNDIO, GND2 = GISOIN (over recommended operating conditions, unless otherwise specified)

PARAMETER	TEST CONDITIONS		SUPPLY CURRENT	MIN	TYP	MAX	UNIT
Channel Supply current - DC signal	EN_IO1 = EN_IO2 = V_{CCI}; V_I = V_{CCI} (ISOW7744); V_I = 0 V (ISOW7744 with F suffix)		I_{DD_IO}		3.6	5.7	mA
			I_{ISOIN}		2.6	3.8	mA
	EN_IO1 = EN_IO2 = V_{CCI}; V_I = 0 V (ISOW7744); V_I = V_{CCI} (ISOW7744 with F suffix)		I_{DD_IO}		3.8	6.1	mA
			I_{ISOIN}		6.7	9.6	mA
Channel Supply current - AC signal	All channels switching with square wave clock input; C_L = 15 pF	1 Mbps	I_{DD_IO}		3.8	6.1	mA
			I_{ISOIN}		4.7	7.3	mA
		10 Mbps	I_{DD_IO}		4.5	7	mA
			I_{ISOIN}		4.7	7.3	mA
		100 Mbps	I_{DD_IO}		13.8	16.9	mA
			I_{ISOIN}		5.2	7.7	mA

(1) V_{CCI} = V_{IO} or V_{ISOIN}

Copyright © 2023 Texas Instruments Incorporated

7.19 Switching Characteristics - 5-V Supply

V_{ISOIN} = 5 V ±10%, V_{IO} = 5 V ±10%, GND1 = GNDIO, GND2 = GISOIN (over recommended operating conditions unless otherwise noted)

PARAMETER		TEST CONDITIONS	MIN	TYP	MAX	UNIT
t_{PLH}, t_{PHL}	Propagation delay time	See Switching Characteristics Test Circuit and Voltage Waveforms	7.6	10.7	15.7	ns
PWD	Pulse width distortion[1] $\lvert t_{PHL} – t_{PLH}\rvert$			0.9	5	ns
ENIO_t_{PLH}, ENIO_t_{PHL}	ENIO propagation delay time (opposite side)	See Enable/Disable Propagation Delay Time Test Circuit and Waveform		210	473.8	ns
$t_{sk(o)}$	Channel-to-channel output skew time[2]	Same-direction channels			4	ns
$t_{sk(pp)}$	Part-to-part skew time[3]				5.5	ns
t_r	Output signal rise time	See Switching Characteristics Test Circuit and Voltage Waveforms		2.5	3.6	ns
t_f	Output signal fall time			2.4	3.5	ns
t_{PHZ}	Channel disable propagation delay, high-to-high impedance output	See Enable/Disable Propagation Delay Time Test Circuit and Waveform		217	286	ns
t_{PLZ}	Channel disable propagation delay, low-to-high impedance output			217	286	ns
t_{PZH}	Channel enable propagation delay, high impedance-to-high output for ISOW774x			237	333	ns
	Channel enable propagation delay, high impedance-to-high output for ISOW774x with F suffix			237	333	ns
t_{PZL}	Channel enable propagation delay, high impedance-to-low output for ISOW774x			237	333	ns
	Channel enable propagation delay, high impedance-to-low output for ISOW774x with F suffix			237	333	ns
t_{DO}	Default output delay time from input power loss	Measured from the time V_{IO} or V_{ISOIN} goes below 1.6 V at 10 mV/ns. See Default Output Delay Time Test Circuit and Voltage Waveforms		0.1	0.3	µs
t_{ie}	Time interval error	2^{16} – 1 PRBS data at 100 Mbps		0.7		ns

(1) Also known as pulse skew.
(2) $t_{sk(o)}$ is the skew between outputs of a single device with all driving inputs connected together and the outputs switching in the same direction while driving identical loads.
(3) $t_{sk(pp)}$ is the magnitude of the difference in propagation delay times between any terminals of different devices switching in the same direction while operating at identical supply voltages, temperature, input signals and loads.

Copyright © 2023 Texas Instruments Incorporated

7.20 Switching Characteristics - 3.3-V Supply

V_{ISOIN} = 3.3 V ±10%, V_{IO} = 3.3 V ±10%, GND1 = GNDIO, GND2 = GISOIN (over recommended operating conditions unless otherwise noted)

PARAMETER		TEST CONDITIONS	MIN	TYP	MAX	UNIT
t_{PLH}, t_{PHL}	Propagation delay time	See Switching Characteristics Test Circuit and Voltage Waveforms	6	11	16.2	ns
PWD	Pulse width distortion[1] $\lvert t_{PHL} – t_{PLH}\rvert$			0.6	4.7	ns
ENIO_t_{PLH}, ENIO_t_{PHL}	ENIO propagation delay time (opposite side)	See Enable/Disable Propagation Delay Time Test Circuit and Waveform		220	474	ns
$t_{sk(o)}$	Channel-to-channel output skew time[2]	Same-direction channels			4.1	ns
$t_{sk(pp)}$	Part-to-part skew time[3]				4.5	ns
t_r	Output signal rise time	See Switching Characteristics Test Circuit and Voltage Waveforms		1.8	2.7	ns
t_f	Output signal fall time			1.6	2.4	ns
t_{PHZ}	Channel disable propagation delay, high-to-high impedance output	See Enable/Disable Propagation Delay Time Test Circuit and Waveform		230	300.4	ns
t_{PLZ}	Channel disable propagation delay, low-to-high impedance output			230	299.6	ns
t_{PZH}	Channel enable propagation delay, high impedance-to-high output for ISOW774x			226	318.9	ns
	Channel enable propagation delay, high impedance-to-high output for ISOW774x with F suffix			226	319.1	ns
t_{PZL}	Channel enable propagation delay, high impedance-to-low output for ISOW774x			225	317.9	ns
	Channel enable propagation delay, high impedance-to-low output for ISOW774x with F suffix			225	317.6	ns
t_{DO}	Default output delay time from input power loss	Measured from the time V_{IO} or V_{ISOIN} goes below 1.6 V at 10 mV/ns. See Default Output Delay Time Test Circuit and Voltage Waveforms		0.1	0.3	µs
t_{ie}	Time interval error	2^{16} – 1 PRBS data at 100 Mbps		0.65		ns

(1) Also known as pulse skew.
(2) $t_{sk(o)}$ is the skew between outputs of a single device with all driving inputs connected together and the outputs switching in the same direction while driving identical loads.
(3) $t_{sk(pp)}$ is the magnitude of the difference in propagation delay times between any terminals of different devices switching in the same direction while operating at identical supply voltages, temperature, input signals and loads.

Copyright © 2023 Texas Instruments Incorporated

7.21 Switching Characteristics - 2.5-V Supply

V_{ISOIN} = 2.5 V ±10%, V_{IO} = 2.5 V ±10%, GND1 = GNDIO, GND2 = GISOIN (over recommended operating conditions unless otherwise noted)

PARAMETER		TEST CONDITIONS	MIN	TYP	MAX	UNIT
t_{PLH}, t_{PHL}	Propagation delay time	See Switching Characteristics Test Circuit and Voltage Waveforms	7.5	12	18	ns
PWD	Pulse width distortion[1] $\lvert t_{PHL} – t_{PLH}\rvert$			0.36	5.1	ns
ENIO_t_{PLH}, ENIO_t_{PHL}	ENIO propagation delay time (opposite side)	See Enable/Disable Propagation Delay Time Test Circuit and Waveform		225	478	ns
$t_{sk(o)}$	Channel-to-channel output skew time[2]	Same-direction channels			4.1	ns
$t_{sk(pp)}$	Part-to-part skew time[3]				6	ns
t_r	Output signal rise time	See Switching Characteristics Test Circuit and Voltage Waveforms		2	3.26	ns
t_f	Output signal fall time			1.8	3.2	ns
t_{PHZ}	Channel disable propagation delay, high-to-high impedance output	See Enable/Disable Propagation Delay Time Test Circuit and Waveform		237	326	ns
t_{PLZ}	Channel disable propagation delay, low-to-high impedance output			236	325	ns
t_{PZH}	Channel enable propagation delay, high impedance-to-high output for ISOW774x			228	360	ns
	Channel enable propagation delay, high impedance-to-high output for ISOW774x with F suffix			228	360	ns
t_{PZL}	Channel enable propagation delay, high impedance-to-low output for ISOW774x			227	350	ns
	Channel enable propagation delay, high impedance-to-low output for ISOW774x with F suffix			227	350	ns
t_{DO}	Default output delay time from input power loss	Measured from the time V_{IO} or V_{ISOIN} goes below 1.6 V at 10 mV/ns. See Default Output Delay Time Test Circuit and Voltage Waveforms		0.1	0.3	µs
t_{ie}	Time interval error	2^{16} – 1 PRBS data at 100 Mbps		0.7		ns

(1) Also known as pulse skew.
(2) $t_{sk(o)}$ is the skew between outputs of a single device with all driving inputs connected together and the outputs switching in the same direction while driving identical loads.
(3) $t_{sk(pp)}$ is the magnitude of the difference in propagation delay times between any terminals of different devices switching in the same direction while operating at identical supply voltages, temperature, input signals and loads.

Copyright © 2023 Texas Instruments Incorporated

7.22 Switching Characteristics - 1.8-V Supply

V_{ISOIN} = 1.8 V ±5%, V_{IO} = 1.8 V ±5%, GND1 = GNDIO, GND2 = GISOIN (over recommended operating conditions unless otherwise noted)

PARAMETER		TEST CONDITIONS	MIN	TYP	MAX	UNIT
t_{PLH}, t_{PHL}	Propagation delay time	See Switching Characteristics Test Circuit and Voltage Waveforms	7.5	15	21.5	ns
PWD	Pulse width distortion(1) $\lvert t_{PHL} – t_{PLH}\rvert$			0	5.8	ns
ENIO_t_{PLH}, ENIO_t_{PHL}	ENIO propagation delay time (opposite side)	See Enable/Disable Propagation Delay Time Test Circuit and Waveform		243	475	ns
$t_{sk(o)}$	Channel-to-channel output skew time(2)	Same-direction channels			4.1	ns
$t_{sk(pp)}$	Part-to-part skew time(3)				8.6	ns
t_r	Output signal rise time	See Switching Characteristics Test Circuit and Voltage Waveforms		1.9	3	ns
t_f	Output signal fall time			1.8	3	ns
t_{PHZ}	Channel disable propagation delay, high-to-high impedance output	See Enable/Disable Propagation Delay Time Test Circuit and Waveform		260	410	ns
t_{PLZ}	Channel disable propagation delay, low-to-high impedance output			260	406	ns
t_{PZH}	Channel enable propagation delay, high impedance-to-high output for ISOW774x			240	444	ns
	Channel enable propagation delay, high impedance-to-high output for ISOW774x with F suffix			240	444	ns
t_{PZL}	Channel enable propagation delay, high impedance-to-low output for ISOW774x			237	439	ns
	Channel enable propagation delay, high impedance-to-low output for ISOW774x with F suffix			237	439	ns
t_{DO}	Default output delay time from input power loss	Measured from the time V_{IO} or V_{ISOIN} goes below 1.6 V at 10 mV/ns. See Default Output Delay Time Test Circuit and Voltage Waveforms		0.1	0.3	µs
t_{ie}	Time interval error	2^{16} – 1 PRBS data at 100 Mbps		0.7		ns

(1) Also known as pulse skew.
(2) $t_{sk(o)}$ is the skew between outputs of a single device with all driving inputs connected together and the outputs switching in the same direction while driving identical loads.
(3) $t_{sk(pp)}$ is the magnitude of the difference in propagation delay times between any terminals of different devices switching in the same direction while operating at identical supply voltages, temperature, input signals and loads.

Copyright © 2023 Texas Instruments Incorporated

7.23 Insulation Characteristics Curves

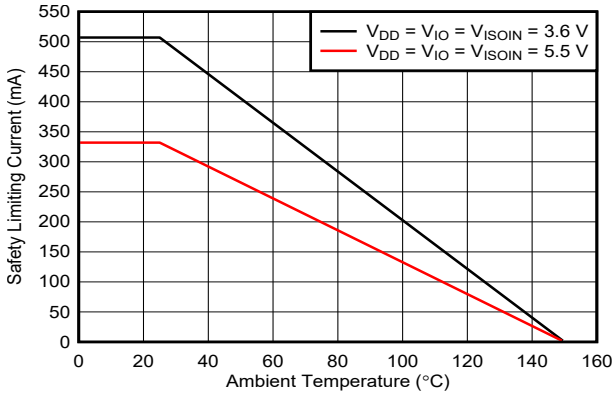

Figure 7-1. Thermal Derating Curve for Safety Limiting Current for DFM-20 Package

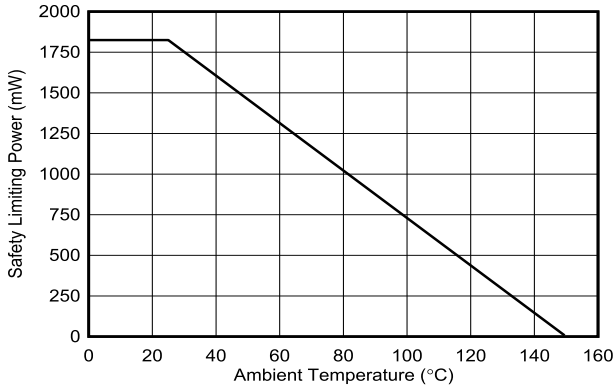

Figure 7-2. Thermal Derating Curve for Safety Limiting Power for DFM-20 Package

7.24 Typical Characteristics

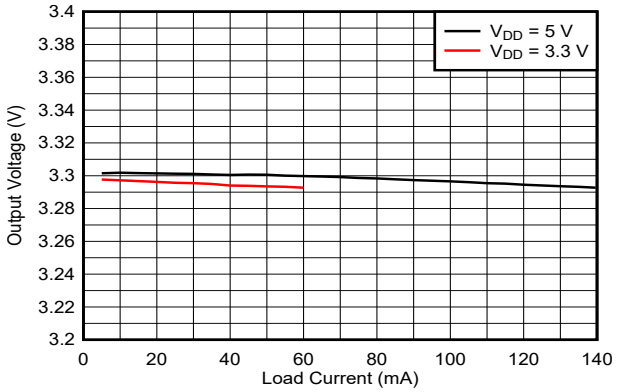

VSEL = GND2 T_A = 25°C V_{ISOOUT} = 3.3 V

Figure 7-3. Isolated Supply Voltage (V_{ISOOUT}) vs Load Current (I_{ISOOUT})

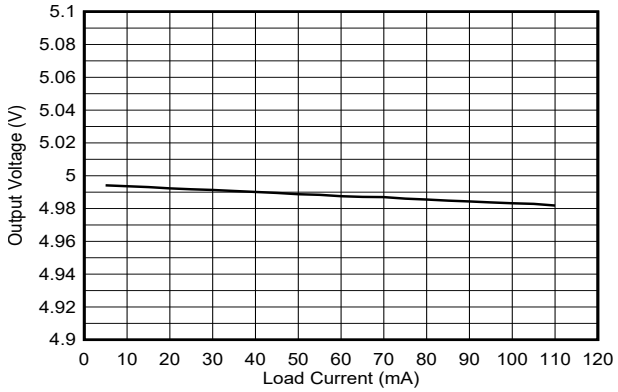

VSEL = V_{ISOOUT} T_A = 25°C V_{ISOOUT} = 5 V

Figure 7-4. Isolated Supply Voltage (V_{ISOOUT}) vs Load Current (I_{ISOOUT})

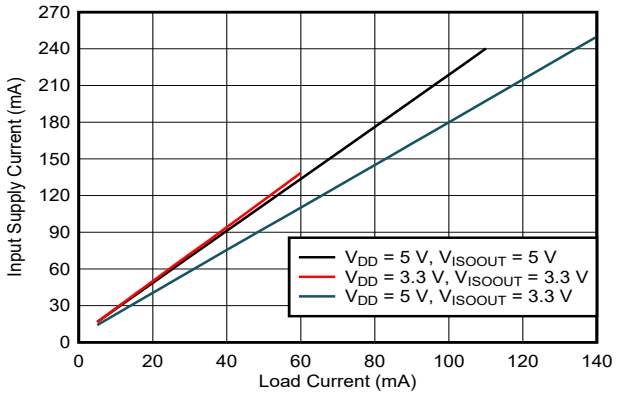

T_A = 25°C

Figure 7-5. Supply Current (I_{DD}) vs Load Current (I_{ISOOUT})

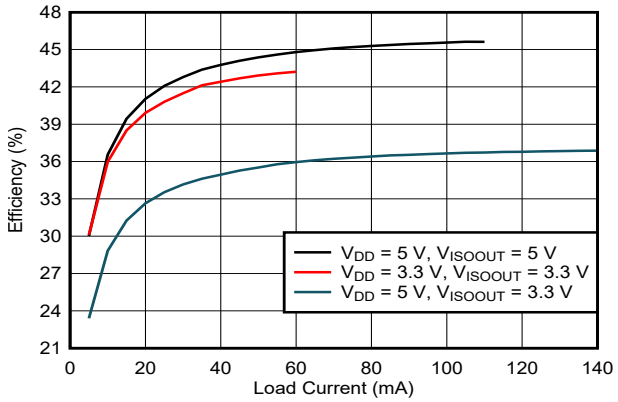

T_A = 25°C

Figure 7-6. Efficiency vs Load Current ($I_{VISOOUT}$)

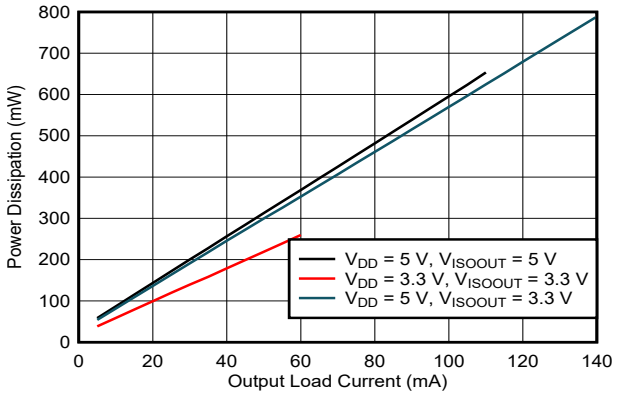

T_A = 25°C

Figure 7-7. Power Dissipation vs Load Current (I_{ISOOUT})

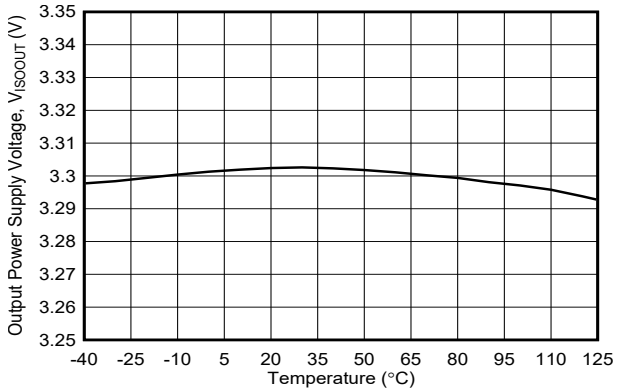

VSEL = GND2 V_{DD} = 5 V No V_{ISOOUT} Load

Figure 7-8. 3.3-V Isolated Supply Voltage (V_{ISOOUT}) vs Free-Air Temperature

Copyright © 2023 Texas Instruments Incorporated

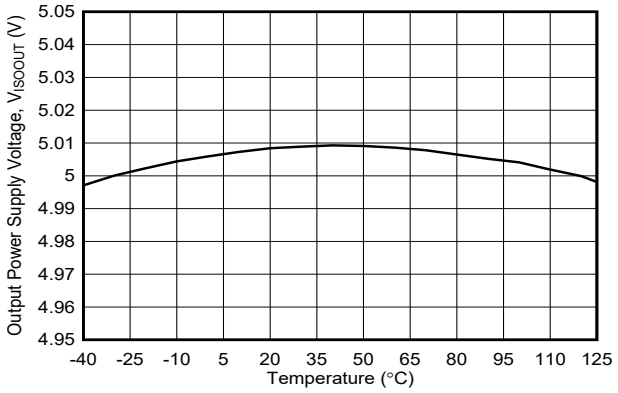

VSEL = V_{ISOOUT} V_{DD} = 5 V No V_{ISOOUT} Load

Figure 7-9. 5-V Isolated Supply Voltage (V_{ISOOUT}) vs Free-Air Temperature

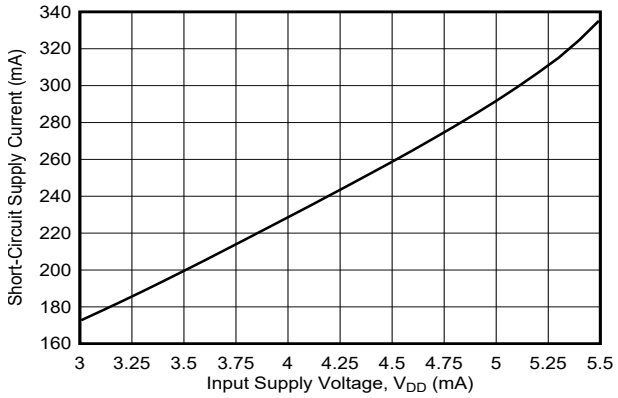

VSEL = V_{ISOOUT} V_{ISOOUT} = GND2 T_A = 25°C = GND1

Figure 7-10. Short-Circuit Supply Current (ICC) vs Supply Voltage (VCC)

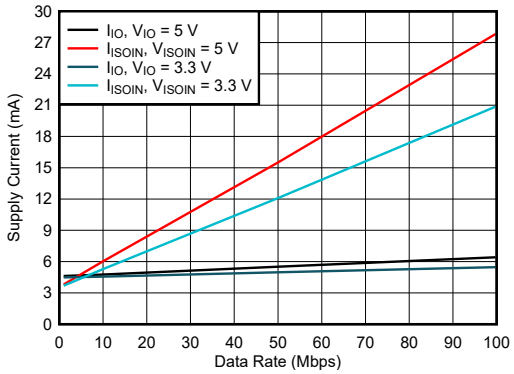

C_L = 15 pF T_A = 25°C

Figure 7-11. ISOW7740 Channel Supply Currents vs Data Rate For C_L = 15 pF

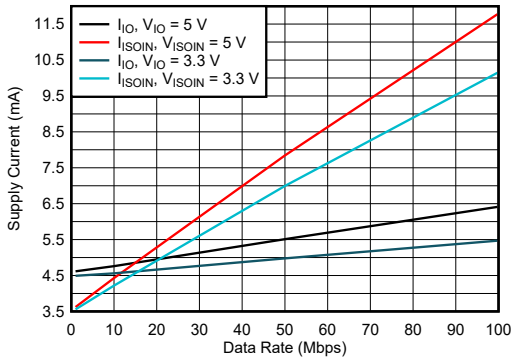

C_L = 0 pF T_A = 25°C

Figure 7-12. ISOW7740 Channel Supply Currents vs Data Rate For C_L = 0 pF

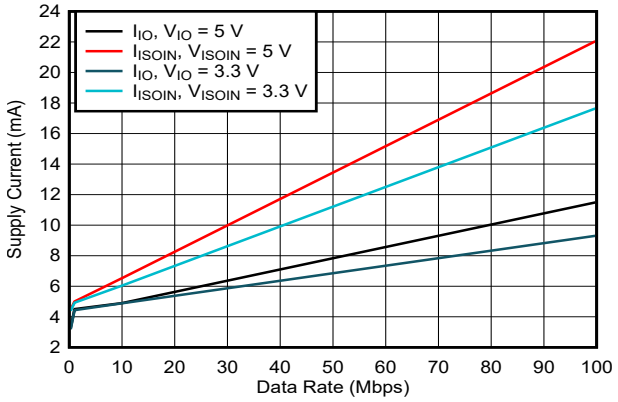

C_L = 15 pF T_A = 25°C

Figure 7-13. ISOW7741 Channel Supply Currents vs Data Rate For C_L = 15 pF

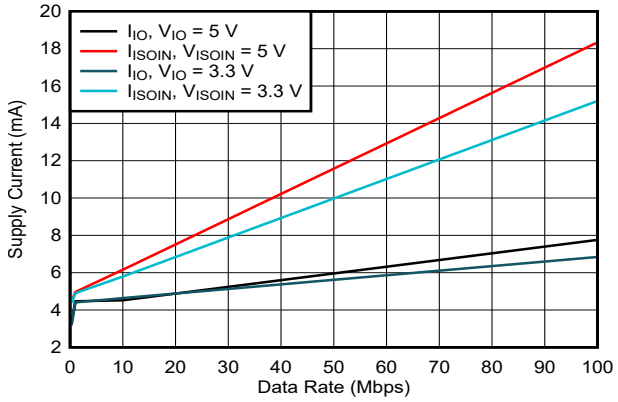

C_L = 0 pF T_A = 25°C

Figure 7-14. ISOW7741 Channel Supply Currents vs Data Rate For C_L = 0 pF

Copyright © 2023 Texas Instruments Incorporated

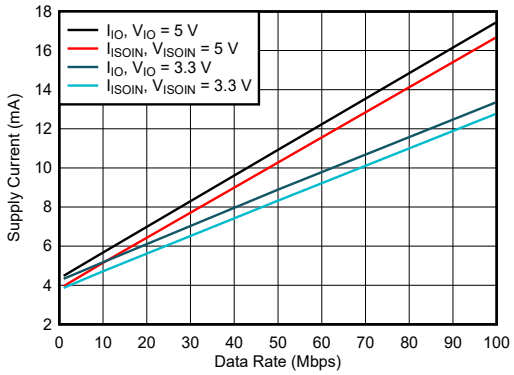

C_L = 15 pF T_A = 25°C

Figure 7-15. ISOW7742 Channel Supply Currents vs Data Rate For C_L = 15 pF

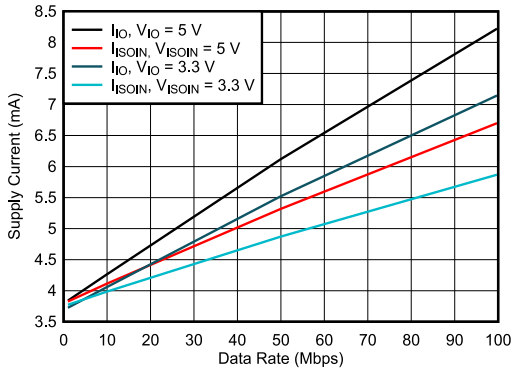

C_L = 0 pF T_A = 25°C

Figure 7-16. ISOW7742 Channel Supply Currents vs Data Rate For C_L = 0 pF

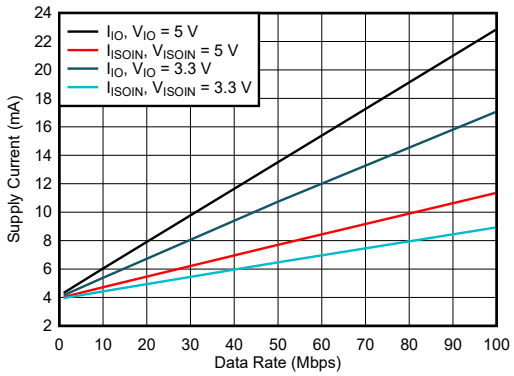

C_L = 15 pF T_A = 25°C

Figure 7-17. ISOW7743 Channel Supply Currents vs Data Rate For C_L = 15 pF

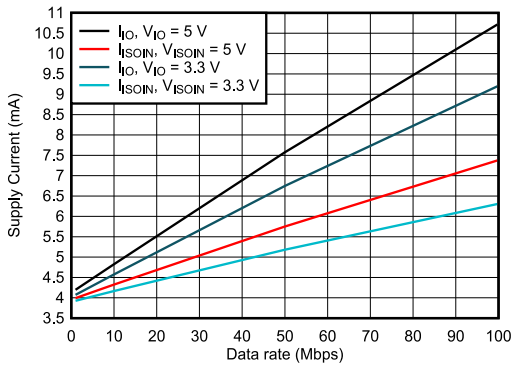

C_L = 0 pF T_A = 25°C

Figure 7-18. ISOW7743 Channel Supply Currents vs Data Rate For C_L = 0 pF

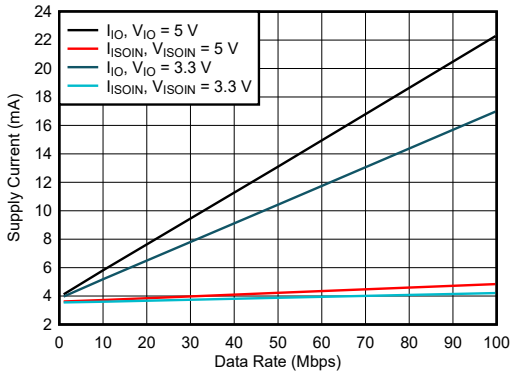

C_L = 15 pF T_A = 25°C

Figure 7-19. ISOW7744 Channel Supply Currents vs Data Rate For C_L = 15 pF

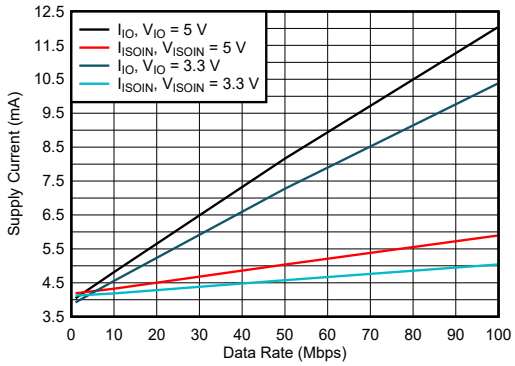

C_L = 0 pF T_A = 25°C

Figure 7-20. ISOW7744 Channel Supply Currents vs Data Rate For C_L = 0 pF

Copyright © 2023 Texas Instruments Incorporated

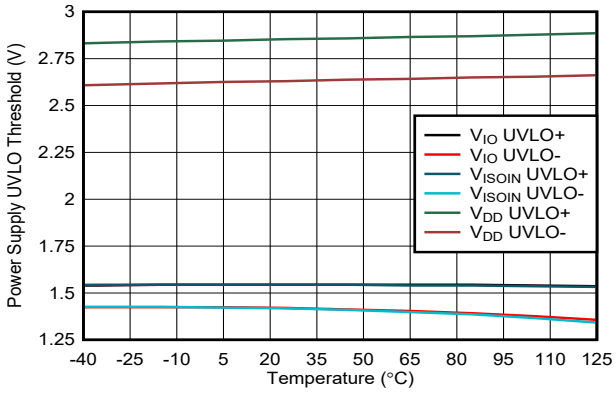

Figure 7-21. Power-Supply Undervoltage Threshold vs Free Air Temperature

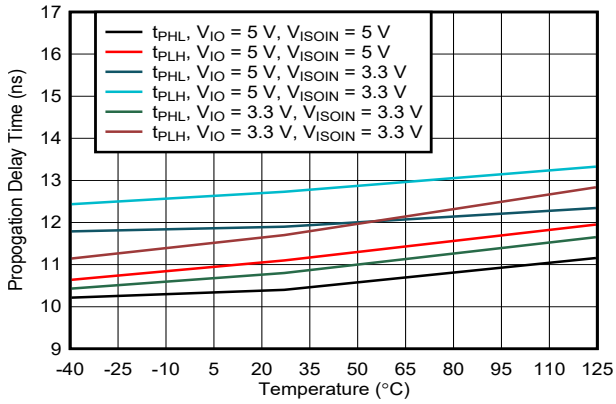

Figure 7-22. Propagation Delay Time vs Free-Air Temperature

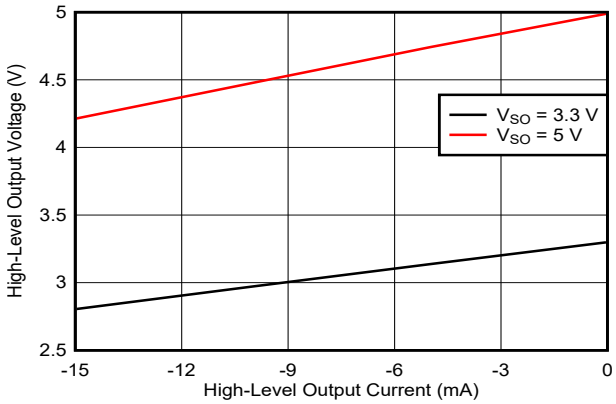

T_A = 25°C

Figure 7-23. High-Level Output Voltage vs High-Level Output Current

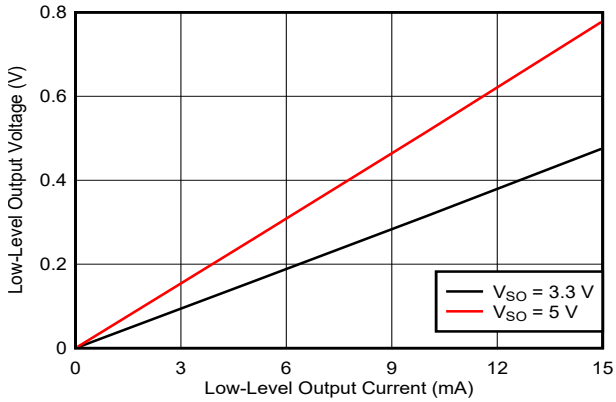

T_A = 25°C

Figure 7-24. Low-Level Output Voltage vs Low-Level Output Current

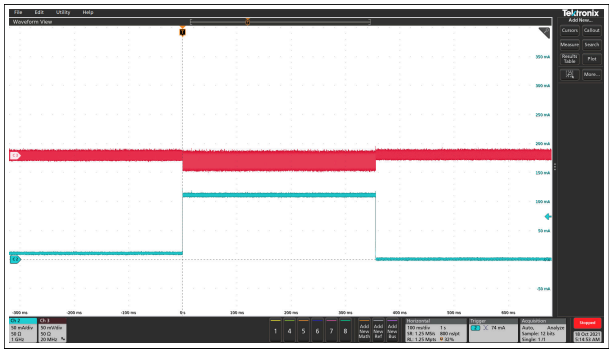

V_{DD} = 5 V V_{ISOOUT} = 3.3 V T_A = 25°C

Figure 7-25. 10-mA to 110-mA Load Transient Response

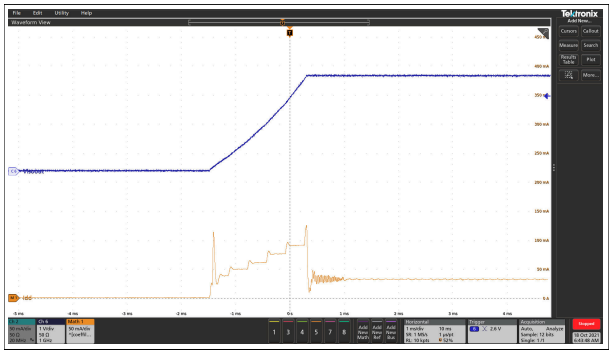

V_{DD} = 5 V V_{ISOOUT} = 3.3 V 10 uF Capacitor on V_{ISOOUT}

Figure 7-26. Soft Start at 10-mA Load For V_{ISOOUT} = 3.3 V

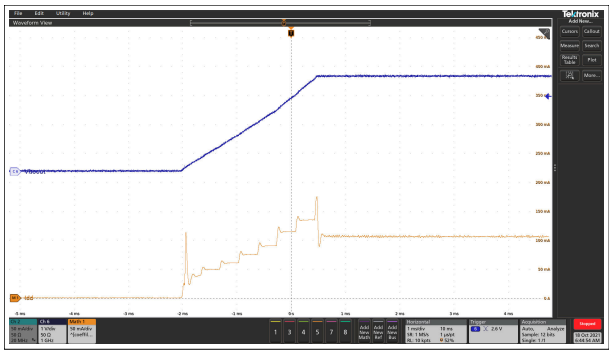

V_{DD} = 5 V V_{ISOOUT} = 3.3 V 10 uF Capacitor on V_{ISOOUT}

Figure 7-27. Soft Start at 50-mA Load For V_{ISOOUT} = 3.3 V

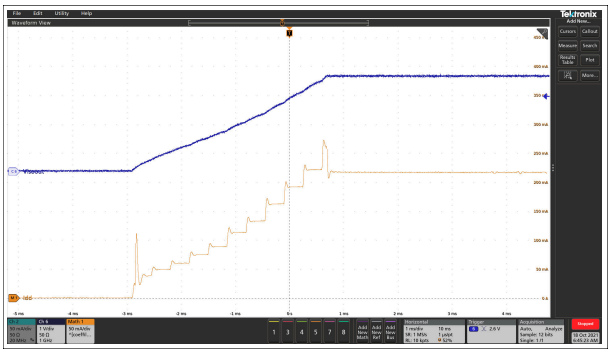

V_{DD} = 5 V V_{ISOOUT} = 3.3 V 10 uF Capacitor on V_{ISOOUT}

Figure 7-28. Soft Start at 110-mA Load For V_{ISOOUT} = 3.3 V

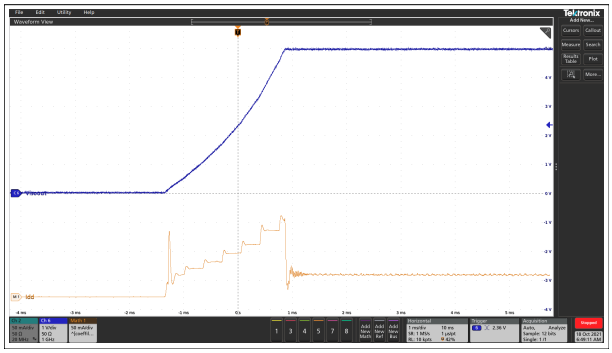

V_{DD} = 5 V V_{ISOOUT} = 5 V 10 uF Capacitor on V_{ISOOUT}

Figure 7-29. Soft Start at 10-mA Load For V_{ISOOUT} = 5 V

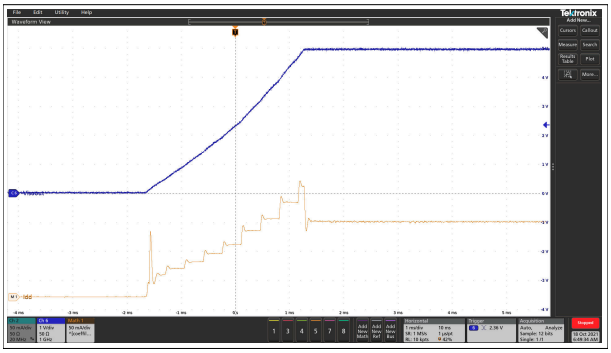

V_{DD} = 5 V V_{ISOOUT} = 5 V 10 uF Capacitor on V_{ISOOUT}

Figure 7-30. Soft Start at 50-mA Load For V_{ISOOUT} = 5 V

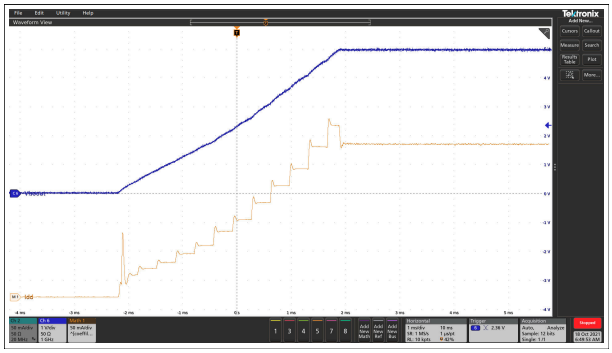

V_{DD} = 5 V V_{ISOOUT} = 5 V 10 uF Capacitor on V_{ISOOUT}

Figure 7-31. Soft Start at 110-mA Load For V_{ISOOUT} = 5 V

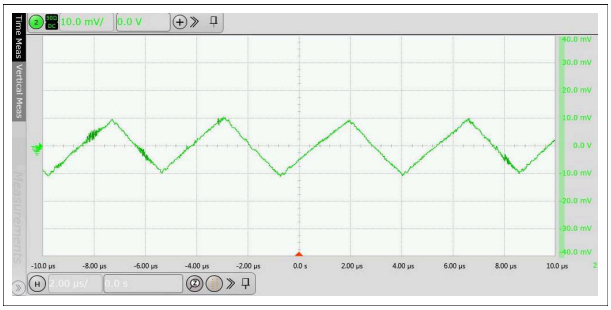

V_{DD} = 3.3 V V_{ISOOUT} = 3.3 V 10 uF Capacitor on V_{ISOOUT}

Figure 7-32. V_{ISOOUT} Ripple Voltage at 3.3 V with 10 uF Capacitor and 60 mA load

Copyright © 2023 Texas Instruments Incorporated

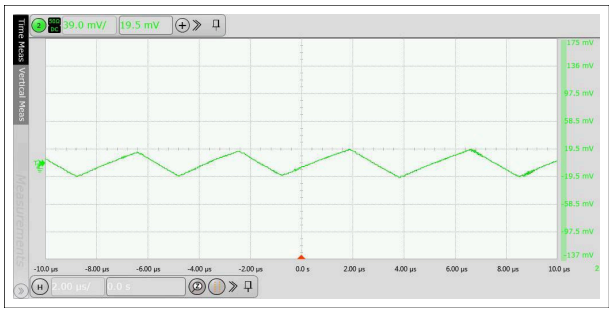

V_{DD} = 5 V V_{ISOOUT} = 5 V 10 uF Capacitor on V_{ISOOUT}

Figure 7-33. V_{ISOOUT} Ripple Voltage at 5 V with 10 uF Capacitor and 110 mA load

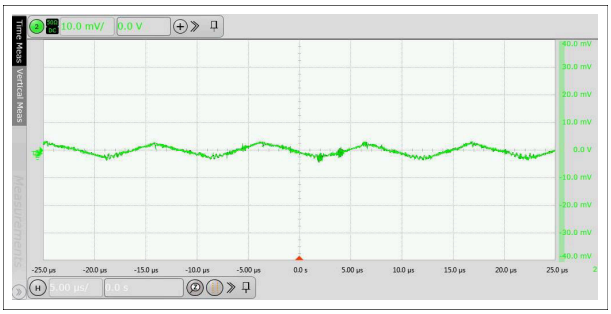

V_{DD} = 3.3 V V_{ISOOUT} = 3.3 V 100 uF Capacitor on V_{ISOOUT}

Figure 7-34. V_{ISOOUT} Ripple Voltage at 3.3 V with 100 uF Capacitor and 60 mA load

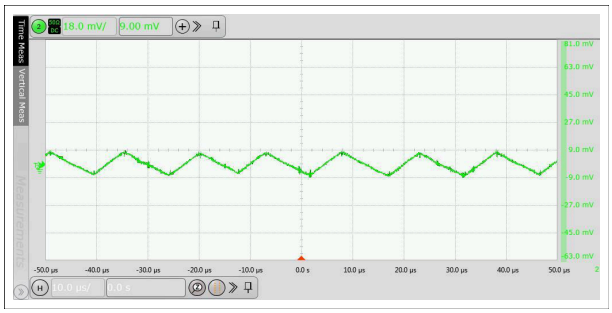

V_{DD} = 5 V V_{ISOOUT} = 5 V 100 uF Capacitor on V_{ISOOUT}

Figure 7-35. V_{ISOOUT} Ripple Voltage at 5 V with 100 uF Capacitor and 110 mA load

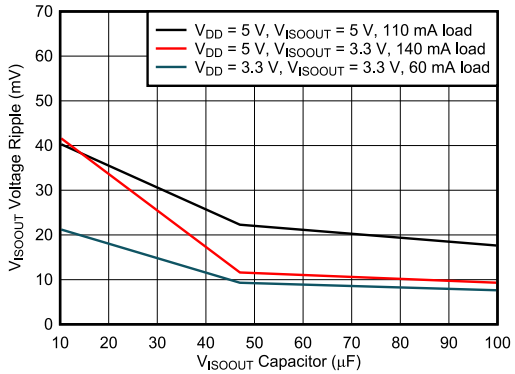

T_A = 25°C

Figure 7-36. V_{ISOOUT} Ripple Voltage vs Load Capacitor

8 Parameter Measurement Information

In the below images, V_{CCI} and V_{CCO} refers to the power supplies V_{IO} and V_{ISOIN}, respectively.

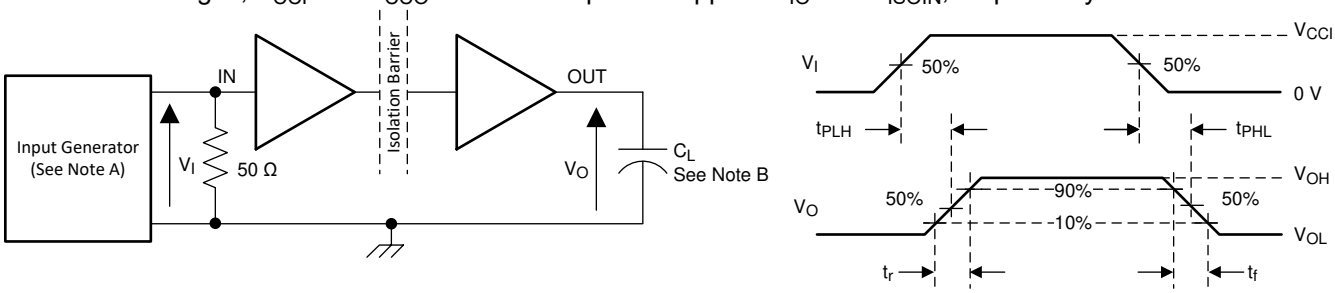

Copyright © 2016, Texas Instruments Incorporated

A. C_L = 15 pF and The input pulse is supplied by a generator having the following characteristics: PRR ≤ 50 kHz, 50% duty cycle, t_r ≤ 3 ns, t_f ≤ 3ns, Z_O = 50 Ω. At the input, 50 Ω resistor is required to terminate Input Generator signal. It is not needed in actual application.

B. B. C_L = 15 pF and includes instrumentation and fixture capacitance within ±20%.

Figure 8-1. Switching Characteristics Test Circuit and Voltage Waveforms

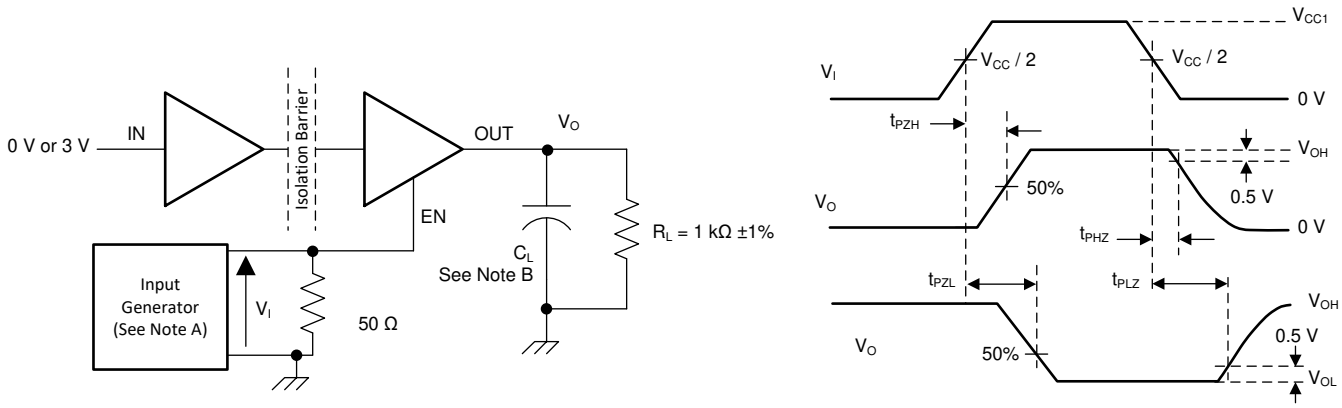

A. A. The input pulse is supplied by a generator having the following characteristics: PRR ≤ 50 kHz, 50% duty cycle, t_r ≤ 3 ns, t_f ≤ 3ns, Z_O = 50 Ω. At the input, 50 Ω resistor is required to terminate Input Generator signal. It is not needed in actual application.

B. B. C_L = 15 pF and includes instrumentation and fixture capacitance within ±20%.

Figure 8-2. Enable/Disable Propagation Delay Time Test Circuit and Waveform

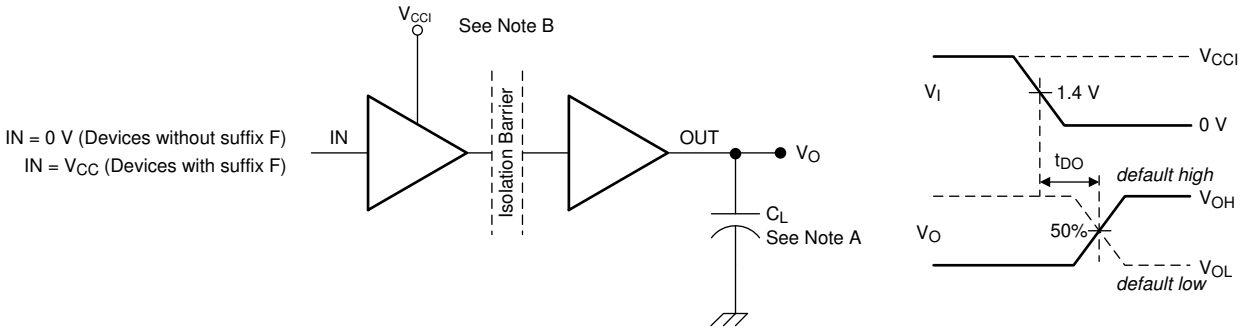

Note

A. C_L = 15 pF and includes instrumentation and fixture capacitance within ±20%.

Copyright © 2023 Texas Instruments Incorporated

Note

B. Power Supply Ramp Rate = 10 mV/ns.

Figure 8-3. Default Output Delay Time Test Circuit and Voltage Waveforms

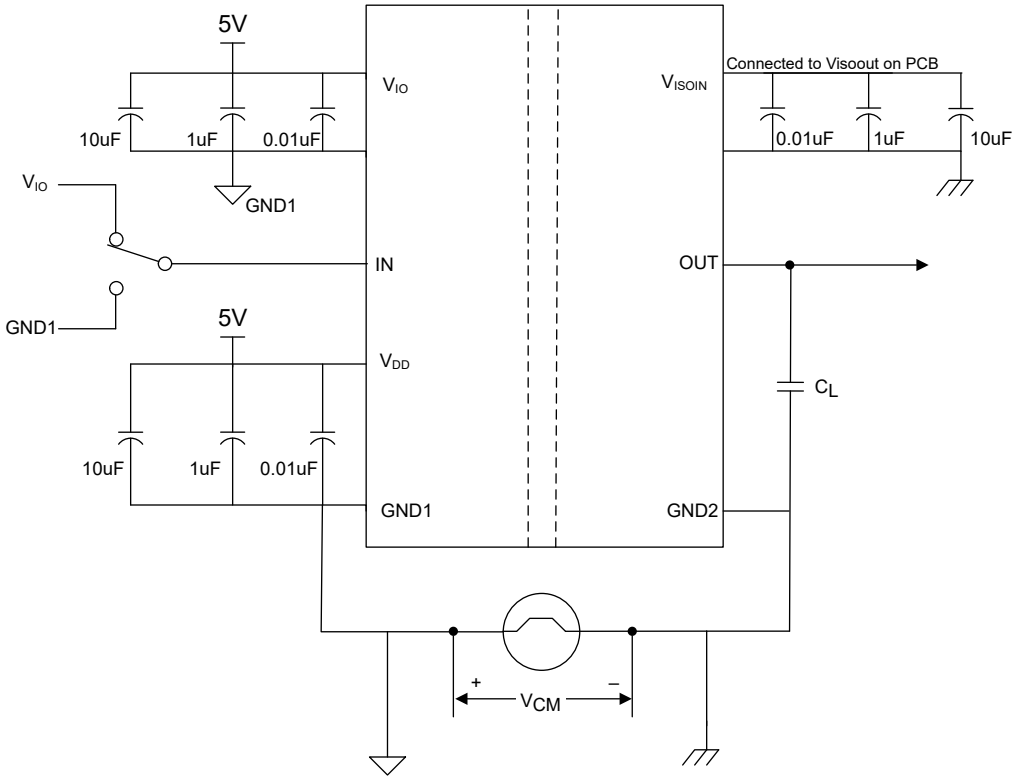

Note

C_L = 15 pF and includes instrumentation and fixture capacitance within ±20%.

Note

Pass-fail criteria: Outputs must remain stable.

Figure 8-4. Common-Mode Transient Immunity Test Circuit

9 Detailed Description

9.1 Overview

The ISOW774x family of devices have low-noise, low-emissions isolated DC-DC converter, and four high- speed isolated data channels. Section 9.2 shows the functional block diagram of the ISOW774x device.

9.1.1 Power Isolation

The integrated isolated DC-DC converter uses advanced circuit and on-chip layout techniques to reduce radiated emissions and achieve upto 46% typical efficiency. The integrated transformer uses thin film polymer as the insulation barrier. Output voltage of power converter can be controlled to 3.3 V or 5 V using V_{SEL} pin. The DC-DC converter can be switched off using the EN/FLT pin to save power. The output voltage, V_{ISOOUT} , is monitored and feedback information is conveyed to the primary side through a dedicated isolation channel. V_{ISOOUT} needs to be connected to V_{ISOIN} to ensure the feedback channel is properly powered to regulate the DC-DC converter. This can be achieved by connecting the pins directly or through an LDO that remains powered up at all times. A ferrite bead is recommended between Visoout and Visoin to further reduce emissions. See the Section 10.2 section. The duty cycle of the primary switching stage is adjusted accordingly. The fast feedback control loop of the power converter ensures low overshoots and undershoots during load transients. Undervoltage lockout (UVLO) with hysteresis is integrated on the V_{IO}, V_{DD} and V_{ISOIN} supplies which ensures robust fails-safe system performance under noisy conditions. An integrated soft-start mechanism ensures controlled inrush current and avoids any overshoot on the output during power up.

9.1.2 Signal Isolation

The integrated signal isolation channels employ an ON-OFF keying (OOK) modulation scheme to transmit the digital data across a silicon-dioxide based isolation barrier. The transmitter sends a high frequency carrier across the barrier to represent one state and sends no signal to represent the other state. The receiver demodulates the signal after signal conditioning and produces the output through a buffer stage. The signal-isolation channels incorporate advanced circuit techniques to maximize the CMTI performance and minimize the radiated emissions from the high frequency carrier and IO buffer switching. Figure 9-1 shows a functional block diagram of a typical signal isolation channel. In order to keep any noise coupling from power converter away from signal path, power supplies on side 1 for power converter (V_{DD}) and signal path(V_{IO}) are kept separate. Similarly on side 2, power converter output (V_{ISOOUT}) needs to be connected to V_{ISOIN} externally on PCB. Emissions can be further improved by placing a ferrite bead between V_{ISOOUT} and V_{ISOIN} as well as between the GND2 pins. For more details, refer to the Layout Guidelines section.

Copyright © 2023 Texas Instruments Incorporated

9.2 Functional Block Diagram

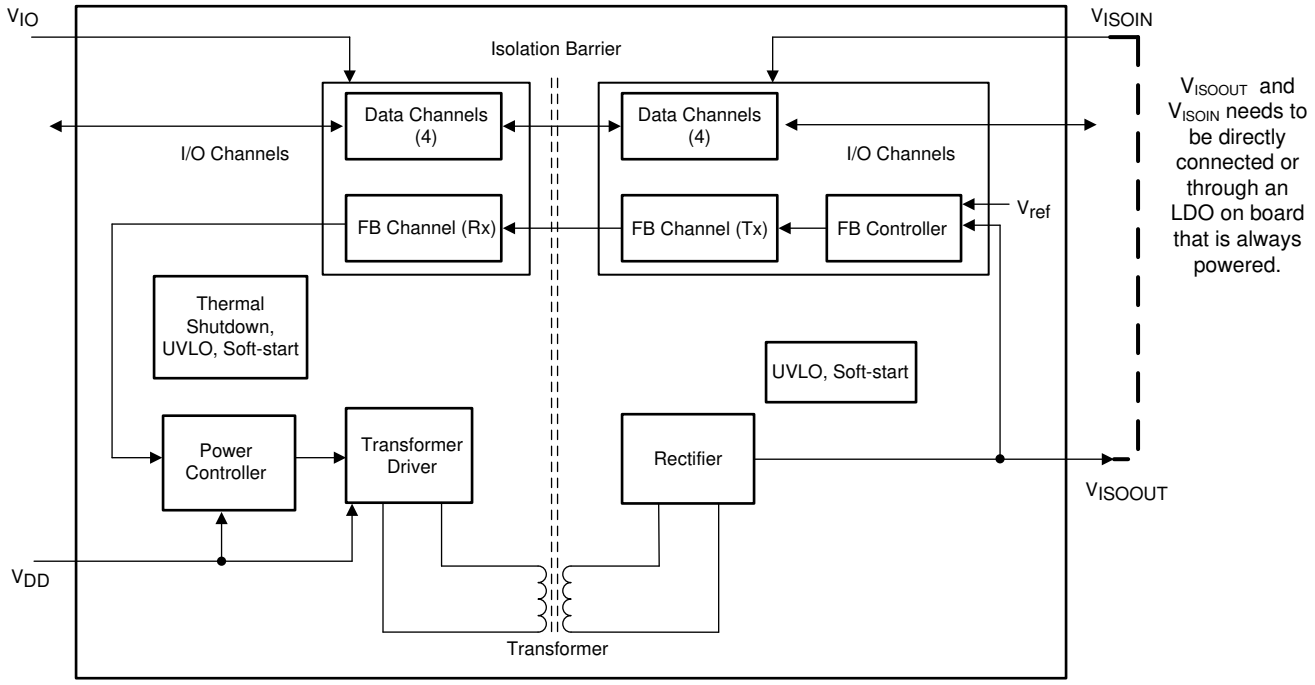

Figure 9-1. Block Diagram

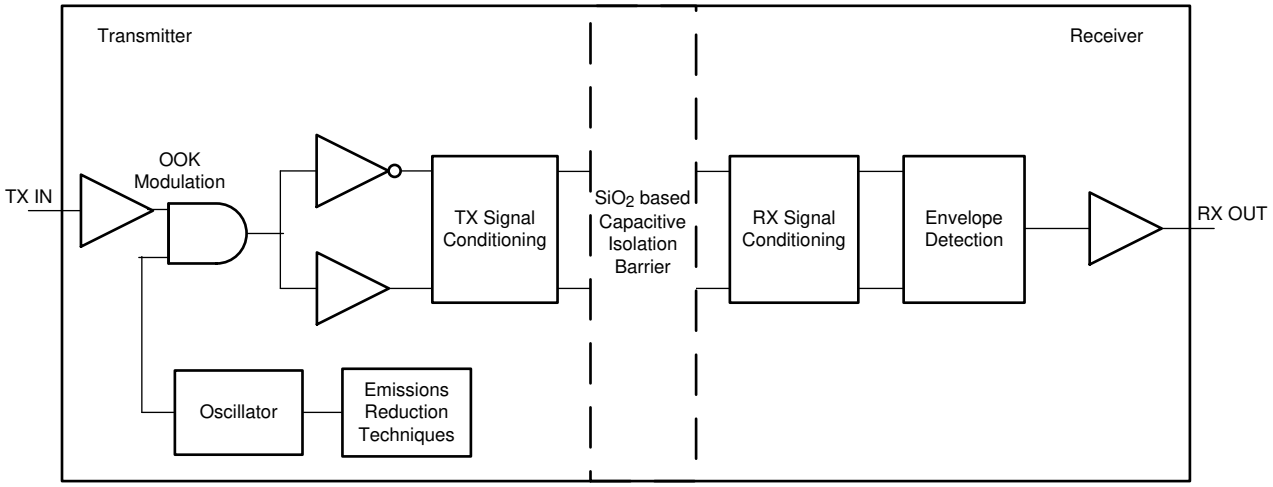

Figure 9-2. Conceptual Block Diagram of a Capacitive Data Channel

Figure 9-3 shows a conceptual detail of how the OOK scheme works.

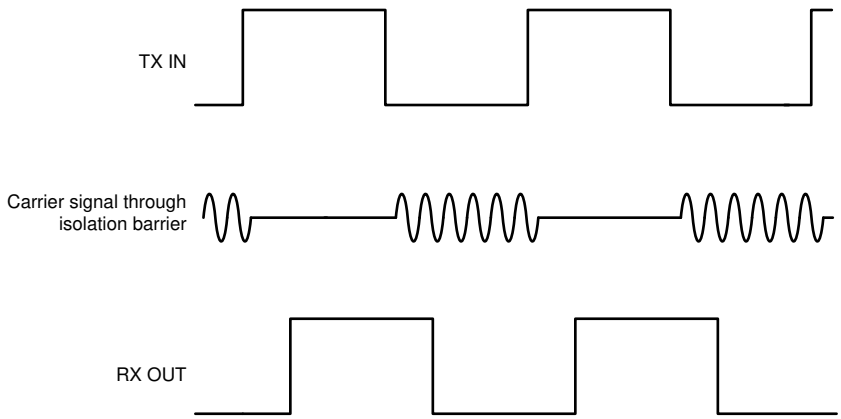

Figure 9-3. On-Off Keying (OOK) Based Modulation Scheme

9.3 Feature Description

Table 9-1 shows an overview of the device features.

Table 9-1. Device Features

PART NUMBER[1]	CHANNEL DIRECTION	MAXIMUM DATA RATE	DEFAULT OUTPUT STATE	RATED ISOLATION[2]
ISOW7740	4 forward, 0 reverse	100 Mbps	High	5 kV_{RMS} / 7071 V_{PK}
ISOW7740F			Low	
ISOW7741	3 forward, 1 reverse		High	
ISOW7741F			Low	
ISOW7742	2 forward, 2 reverse		High	
ISOW7742F			Low	
ISOW7743	1 forward, 3 reverse		High	
ISOW7743F			Low	
ISOW7744	0 forward, 4 reverse		High	
ISOW7744F			Low	

1. The F suffix is part of the orderable part number. See the *Section 14* section for the full orderable part number.
2. For detailed isolation ratings, see the Section 7.7 table.

9.3.1 Electromagnetic Compatibility (EMC) Considerations

The ISOW774x devices use emissions reduction schemes for the internal oscillator and advanced internal layout scheme to minimize radiated emissions at the system level.

Many applications in harsh industrial environment are sensitive to disturbances such as electrostatic discharge (ESD), electrical fast transient (EFT), surge and electromagnetic emissions. These electromagnetic disturbances are regulated by international standards such as IEC 61000-4-x and CISPR 32. Although system-level performance and reliability depends, to a large extent, on the application board design and layout, the ISOW774x devices incorporate many chip-level design improvements for overall system robustness. Some of these improvements include:

- Robust ESD protection cells for input and output signal pins and inter-chip bond pads.
- Low-resistance connectivity of ESD cells to supply and ground pins.
- Enhanced performance of high voltage isolation capacitor for better tolerance of ESD, EFT and surge events.
- Bigger on-chip decoupling capacitors to bypass undesirable high energy signals through a low impedance path.

Copyright © 2023 Texas Instruments Incorporated

- PMOS and NMOS devices isolated from each other by using guard rings to avoid triggering of parasitic SCRs.
- Reduced common mode currents across the isolation barrier by ensuring purely differential internal operation.
- Power path and signal path separated to minimize internal high frequency coupling and allowing for an external filtering knob using ferrite beads available to further reduce emissions
- Reduced power converter switching frequency to 25 Mhz to reduce strength of high frequency components in emissions spectrum

9.3.2 Power-Up and Power-Down Behavior

The ISOW774x device has built-in UVLO on the V_{IO}, V_{DD}, and V_{ISOIN} supplies with positive-going and negative-going thresholds and hysteresis. Both the power converter supply (VDD) and logic supply (VIO) need to be present for the device to work. If either of them is below its UVLO, both the signal path and the power converter are disabled.

When the V_{DD} voltage crosses the positive-going UVLO threshold during power-up, the DC-DC converter initializes and the power converter duty cycle is increased in a controlled manner. This soft-start scheme limits primary peak currents drawn from the V_{DD} supply and charges the V_{ISOOUT} output in a controlled manner, avoiding overshoots. Outputs of the isolated data channels are in an indeterminate state until the V_{IO} or V_{DD} voltage crosses the positive-going UVLO threshold. When the UVLO positive-going threshold is crossed on the secondary side V_{ISOOUT} pin, the feedback data channel starts providing feedback to the primary controller. The regulation loop takes over and the isolated data channels go to the normal state defined by the respective input channels or their default states. Design should consider a sufficient time margin (typically 10 ms with 10-µF load capacitance) to allow this power up sequence before valid data channels are accounted for system functionality.

When either V_{IO} or V_{DD} power is lost, the primary side DC-DC controller turns off when the UVLO lower threshold is reached. The V_{ISOOUT} capacitor then discharges depending on the external load. The isolated data outputs on the V_{ISOIN} side are returned to the default state for the brief time that the V_{ISOIN} voltage takes to discharge to zero.

9.3.3 Protection Features

The ISOW774x devices have multiple protection features to create a robust system level solution.

- The Enable DC-DC / FAULT protection feature (EN/FLT) can be used as either an input pin, to enable or disable the integrated DC-DC power converter, or as an output pin, which works as an alert signal if the power converter is not operating properly. In the /FAULT use case, an alert is reported if V_{DD} > 7 V, V_{DD} < 2.5 V, or if the junction temperature >170°C. When a fault is detected, this pin will go low, disabling the DC-DC converter to prevent any damage.

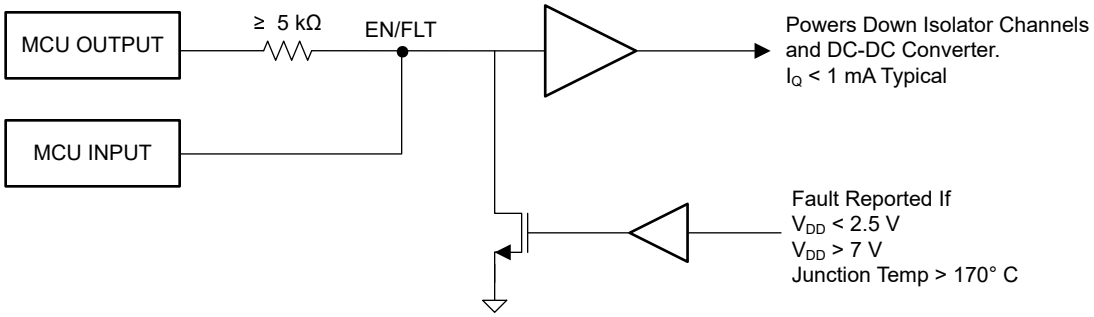

Figure 9-4. EN/FLT Fault Pin Diagram

- An over-voltage clamp feature is present on V_{ISOOUT} which will clamp the voltage at 6 V, when VSEL = V_{ISOOUT}, or 4 V, when VSEL = GND2, if there is an increase in voltage seen on V_{ISOOUT}. It is recommended that the V_{ISOOUT} stays lower than the over-clamp voltage for device reliability.
- Over-voltage lock out on V_{DD} will occur when a voltage higher than 7 V is seen. The device will go into a low power state and the EN/FLT pin will go low.
- The device is protected against output overload and short circuit. Output voltage starts dropping when the power converter is not able to deliver the current demanded during overload conditions. For a V_{ISOOUT} short-circuit to ground, the duty cycle of the converter is limited to help protect against any damage.

Copyright © 2023 Texas Instruments Incorporated

- The device is protected against output overload and short circuit. Output voltage starts dropping when the power converter is not able to deliver the current demanded during overload conditions. For a V_{ISOOUT} short-circuit to ground, the duty cycle of the converter is limited to help protect against any damage.
- The device is protected against output overload and short circuit. Output voltage starts dropping when the power converter is not able to deliver the current demanded during overload conditions. For a V_{ISOOUT} short-circuit to ground, the duty cycle of the converter is limited to help protect against any damage.
- Thermal protection is also integrated to help prevent the device from getting damaged during overload and short-circuit conditions on the isolated output. Under these conditions, the device temperature starts to increase. When the temperature goes above 165°C, thermal shutdown activates and the primary controller turns off which removes the energy supplied to the V_{ISOOUT} load, which causes the device to cool off. When the junction temperature goes below 150°C, the device starts to function normally. If an overload or output short-circuit condition prevails, this protection cycle is repeated. Care should be taken in the design to prevent the device junction temperatures from reaching such high values.

Copyright © 2023 Texas Instruments Incorporated

9.4 Device Functional Modes

Table 9-2 lists the supply configurations for these devices.

Table 9-2. Supply Configuration Function Table

V_{DD} [(1)]	V_{IO}	VSEL	V_{ISOOUT} [(3)]
< $V_{DD(UVLO+)}$	>$V_{IO(UVLO+)}$	X	OFF
>$V_{DD(UVLO+)}$	<$V_{IO(UVLO+)}$	X	OFF
5 V	1.71 V to 5.5 V	High (shorted to V_{ISOOUT})	5 V
5 V or 3.3 V	1.71 V to 5.5 V	Low (shorted to GND2) [(2)]	3.3 V

(1) V_{DD}= 3.3 V, MODE shorted to V_{ISOOUT}(essentially V_{ISOOUT} = 5 V) is not the recommended mode of operation
(2) The MODE pin has a weak pulldown internally. Therefore for V_{ISOOUT} = 3.3 V, the MODE pin should be strongly connected to the GND2 pin in noisy system scenarios.
(3) V_{ISOOUT} shorted to V_{ISOIN} on PCB and both GND2 pins are shorted to each other and EN=High

Table 9-3 lists the channel isolators functional modes for these devices.

Table 9-3. Channel Isolator Function Table

CHANNEL INPUT SUPPLY (V_{CCI}) [(1)]	CHANNEL OUTPUT SUPPLY (V_{CCO}) [(1)]	INPUT (INx)	IO ENABLE (EN_IOx)	OUTPUT (OUTx)	COMMENTS
PU	PU	H	H or Open	H	Normal Operation: A channel output assumes the logic state of its input.
		L	H or Open	L	
		Open	H or Open	Default	Default mode[(2)]: When INx is open, the corresponding channel output goes to its default logic state.
		X	L	Z and Default	A low value of output enable causes the outputs of the same side to be high impedance and the output of opposite side to be fail-safe default state.
PD	PU	X	H or Open	Default	Default mode[(2)]: When V_{CCI} is unpowered, a channel output assumes the logic state based on the selected default option. When V_{CCI} transitions from unpowered to powered-up, a channel output assumes the logic state of the input. When V_{CCI} transitions from powered-up to unpowered, channel output assumes the selected default state.

(1) V_{CCI} = Input-side V_{IO} or V_{ISOIN}; V_{CCO} = Output-side V_{IO} or V_{ISOIN}; PU = Powered up (V_{IO} > 1.7 V, V_{ISOIN} > 1.7 V); PD = Powered down (V_{IO} < 1 V, V_{ISOIN} < 1 V); X = Irrelevant; H = High level; L = Low level.
(2) In the default condition, the output is high for the ISOW774x device and low with the F suffix.

Copyright © 2023 Texas Instruments Incorporated

9.4.1 Device I/O Schematics

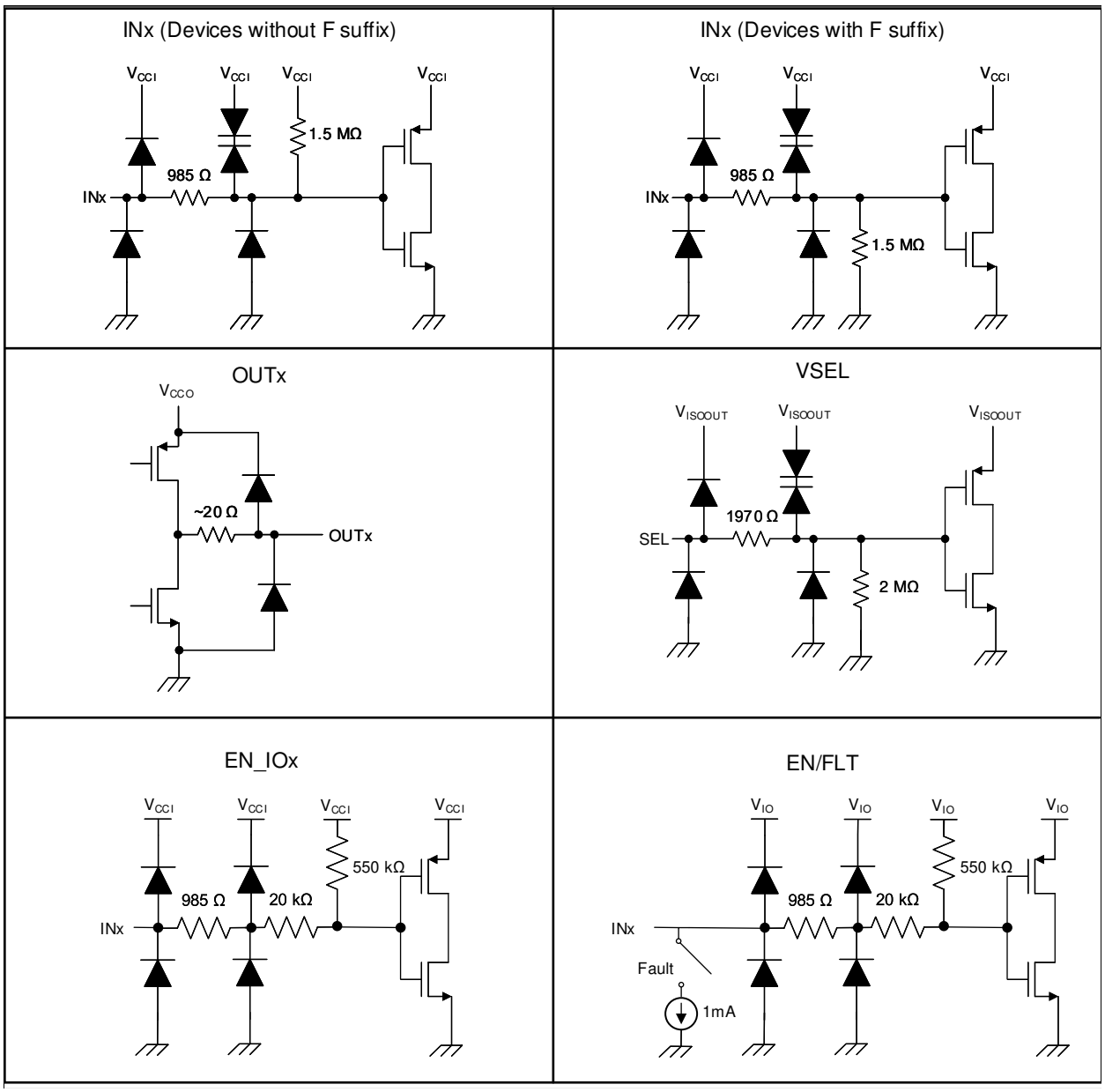

Figure 9-5. Device I/O Schematics

Copyright © 2023 Texas Instruments Incorporated

10 Application and Implementation

Note

Information in the following applications sections is not part of the TI component specification, and TI does not warrant its accuracy or completeness. TI's customers are responsible for determining suitability of components for their purposes. Customers should validate and test their design implementation to confirm system functionality.

10.1 Application Information

The device is a high-performance, quad channel digital isolator with integrated DC-DC converter. Typically digital isolators require two power supplies isolated from each other to power up both sides of device. Due to the integrated DC-DC converter in the device, the isolated supply is generated inside the device that can be used to power isolated side of the device and peripherals on isolated side, thus saving board space. The device uses single-ended CMOS-logic switching technology. When designing with digital isolators, keep in mind that because of the single-ended design structure, digital isolators do not conform to any specific interface standard and are only intended for isolating single-ended CMOS or TTL digital signal lines. The isolator is typically placed between the data controller (that is Microcontroller or UART), and a data converter or a line transceiver, regardless of the interface type or standard.

The device is suitable for applications that have limited board space and desire more integration. The device is also suitable for very high voltage applications, where power transformers meeting the required isolation specifications are bulky and expensive.

10.2 Typical Application

For step-by-step design procedure, circuit schematics, bill of materials, printed circuit board (PCB) files, simulation results, and test results, refer to TI Design TIDA-01333, *Eight-Channel, Isolated, High-Voltage Analog Input Module With ISOW7841 Reference Design*.

Figure 10-1 shows the typical schematic for SPI isolation.

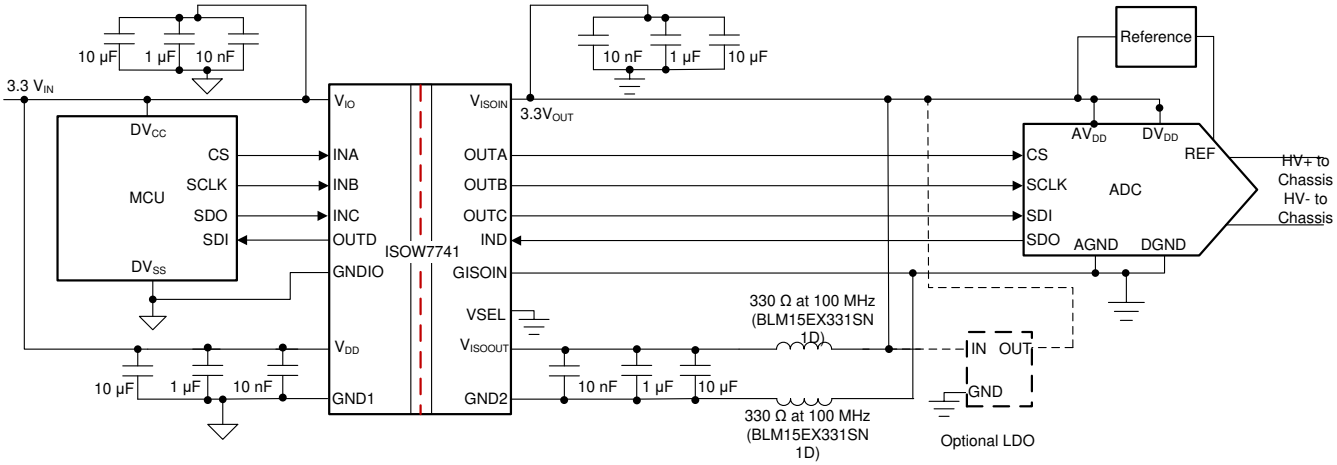

Figure 10-1. Isolated Power and SPI for ADC Sensing Application with ISOW7741

10.2.1 Design Requirements

To design with this device, use the parameters listed in Table 10-1.

Table 10-1. Design Parameters

PARAMETER	VALUE
V_{DD} input voltage	3 V to 5.5 V
V_{IO} input voltage	1.71 V to 5.5 V
V_{ISOIN} input voltage	1.71 V to 5.5 V
V_{DD} decoupling capacitors	10 µF + 1 µF + 0.01 µF + optional additional capacitance
V_{IO} decoupling capacitors	0.1 µF + optional additional capacitance
V_{ISOIN} decoupling capacitors	0.1 µF + optional additional capacitance
V_{ISOOUT} decoupling capacitors	10 µF + 1 µF + 0.01 µF + optional additional capacitance
V_{ISOOUT} to V_{ISOIN} series inductor	BLM15ELX9331SN1D
GND2 to GISOIN series inductor	BLM15ELX9331SN1D
V_{IO} series inductor	BLM15ELX9331SN1D
V_{DD} series inductor	BLM15ELX9331SN1D
GND1 to GNDIO series inductor	BLM15ELX9331SN1D

Because of very-high current flowing through the ISOW7741 device device V_{DD} and V_{ISOOUT} supplies, higher decoupling capacitors typically provide better noise and ripple performance. Although a 10-µF capacitor is adequate, higher decoupling capacitors (such as 47 µF) on both the V_{DD} and V_{ISOOUT} pins to the respective grounds are strongly recommended to achieve the best performance.

10.2.2 Detailed Design Procedure

The devices requires specific placement of external bypass capacitors and ferrite beads to operate at high performance. These low-ESR ceramic bypass capacitors must be placed as close to the chip pads as possible.

Copyright © 2023 Texas Instruments Incorporated

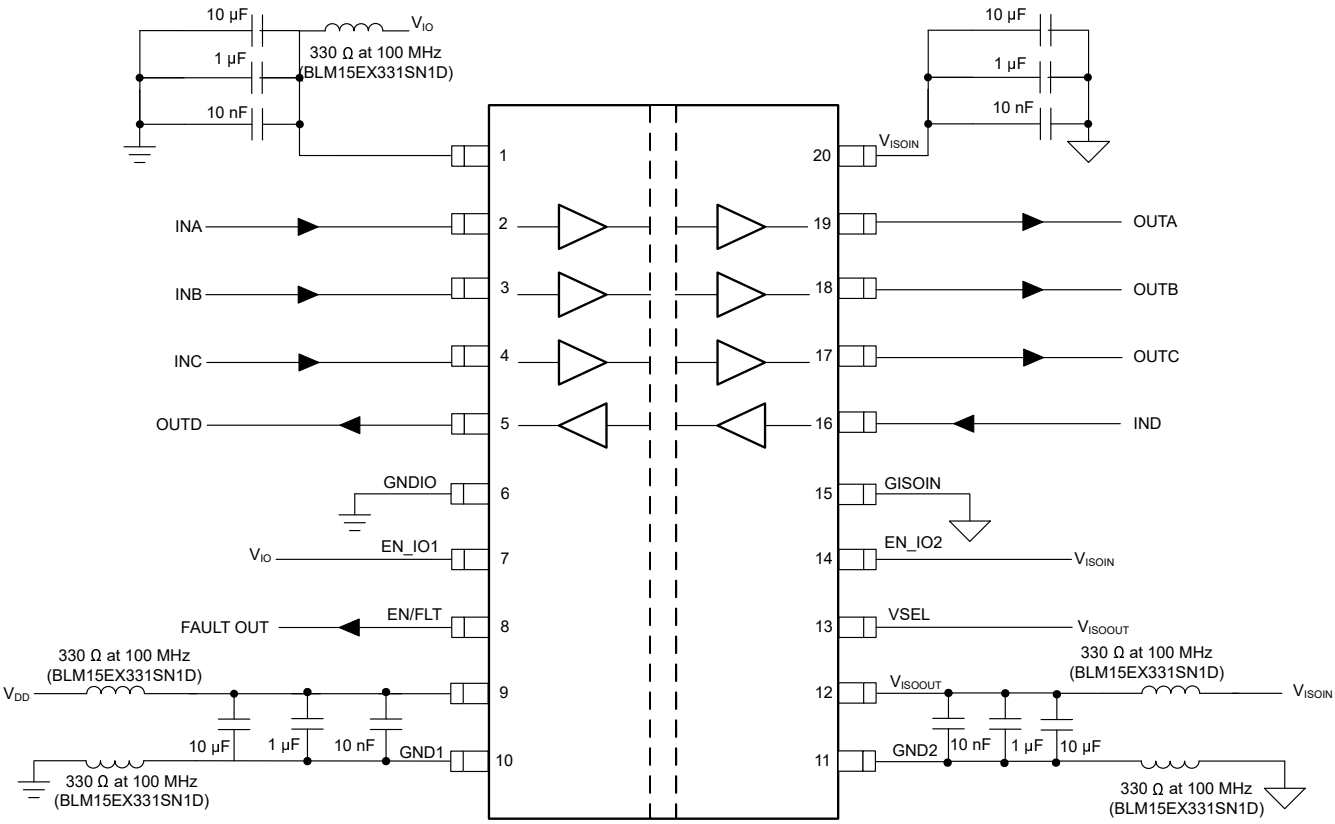

Figure 10-2. Typical ISOW7741 Circuit Hook-Up

10.2.3 Application Curve

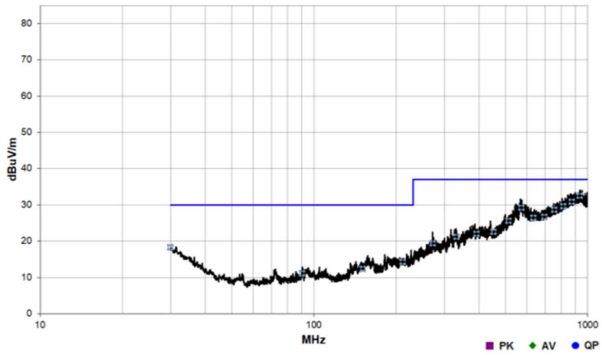

V_{DD} = 5 V V_{ISOOUT} = 5 V I_{ISOOUT} = 100 mA

Figure 10-3. ISOW7741 Radiated Emissions versus CISPR32B line (Blue)

10.2.4 *Insulation Lifetime*

Insulation lifetime projection data is collected by using industry-standard Time Dependent Dielectric Breakdown (TDDB) test method. In this test, all pins on each side of the barrier are tied together creating a two-terminal device and high voltage applied between the two sides; See Figure 10-4 for TDDB test setup. The insulation breakdown data is collected at various high voltages switching at 60 Hz over temperature. For reinforced insulation, VDE standard requires the use of TDDB projection line with failure rate of less than 1 part per million (ppm). Even though the expected minimum insulation lifetime is 20 years at the specified working isolation voltage, VDE reinforced certification requires additional safety margin of 20% for working voltage and 87.5% for

lifetime which translates into minimum required insulation lifetime of 37.5 years at a working voltage that's 20% higher than the specified value.

Figure 10-5 shows the intrinsic capability of the isolation barrier to withstand high voltage stress over its lifetime. Based on the TDDB data, the intrinsic capability of the insulation is 1000 V_{RMS} with a lifetime of 1184 years.

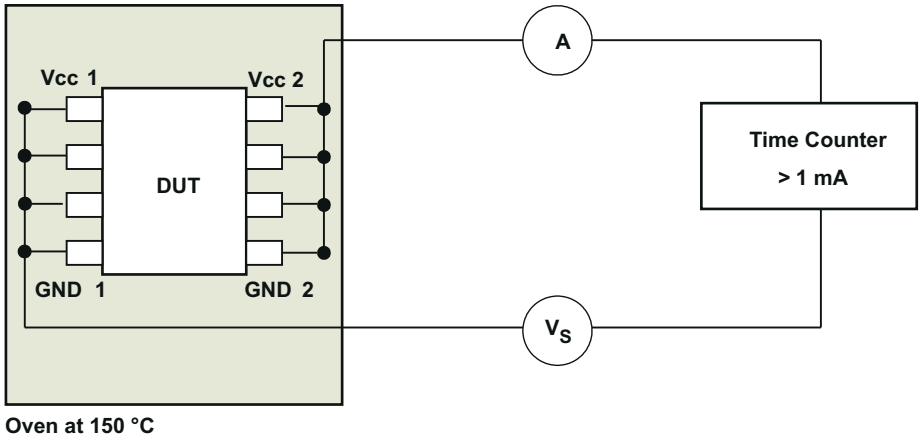

Figure 10-4. Test Setup for Insulation Lifetime Measurement

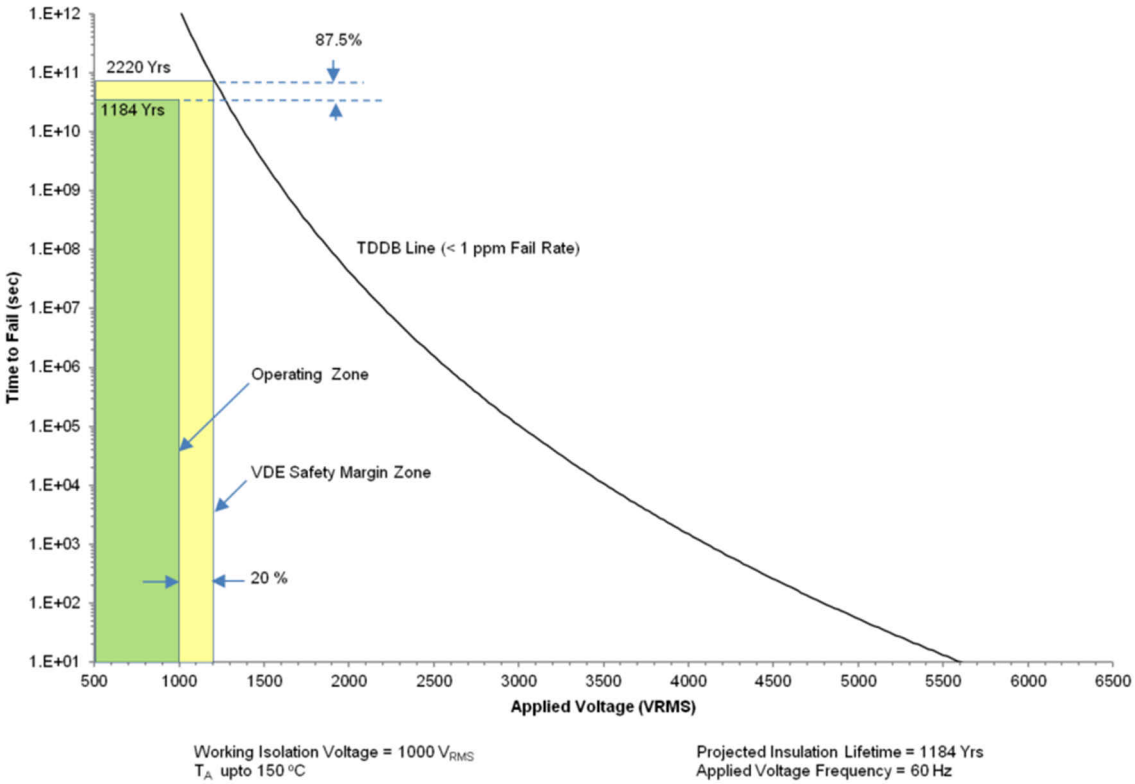

Figure 10-5. Insulation Lifetime Projection Data

Copyright © 2023 Texas Instruments Incorporated

11 Power Supply Recommendations

To help make sure that operation is reliable at data rates and supply voltages, adequate decoupling capacitors must be located as close to supply pins as possible. V_{ISOOUT} needs to be connected to V_{ISOIN} to ensure the feedback channel is properly powered to regulate the DC-DC converter. If V_{ISOOUT} and V_{ISOIN} are not connected, the DC-DC converter will run open loop and the V_{ISOOUT} voltage will drift until the over-voltage clamp clamps at 6 V. There are two ways to connect $V_{ISOOUT}$and V_{ISOIN}:

1) connect V_{ISOOUT} and V_{ISOIN} directly with a ferrite bead. A ferrite bead is recommended between $V_{ISOOUT}$and V_{ISOIN} to further reduce emissions.

2) connect V_{ISOOUT} and V_{ISOIN} with a ferrite bead through an LDO that remains powered up at all times. If the LDO has an EN pin then keep the EN high at all times.

The input supply (V_{IO} and V_{DD}) must have an appropriate current rating to support output load and switching at the maximum data rate required by the end application. For more information, refer to the Section 10.2 section.

For an output load current of 110 mA, it is recommended to have >600 mA of input current limit and for lower output load currents, the input current limit can be proportionally lower.

Copyright © 2023 Texas Instruments Incorporated

12 Layout

12.1 Layout Guidelines

A low cost two layer PCB should be sufficient to achieve good EMC performance:

- Routing the high-speed traces on the top layer avoids the use of vias (and the introduction of their inductances) and allows for clean interconnects between the isolator and the transmitter and receiver circuits of the data link.
- Placing a solid ground plane next to the high-speed signal layer establishes controlled impedance for transmission line interconnects and provides an excellent low-inductance path for the return current flow.
- Placing the power plane next to the ground plane creates additional high-frequency bypass capacitance of approximately 100 pF/in^2.
- Routing the slower speed control signals on the bottom layer allows for greater flexibility as these signal links usually have margin to tolerate discontinuities such as vias.

If an additional supply voltage plane or signal layer is needed, add a second power or ground plane system to the stack to keep it symmetrical. This makes the stack mechanically stable and prevents it from warping. Also the power and ground plane of each power system can be placed closer together, thus increasing the high-frequency bypass capacitance significantly.

Because the device has no thermal pad to dissipate heat, the device dissipates heat through the respective GND pins. Ensure that enough copper is present on both GND pins to prevent the internal junction temperature of the device from rising to unacceptable levels.

Figure 12-1 shows the recommended placement and routing of device bypass capacitors. Below guidelines must be followed to meet application EMC requirements:

- High frequency bypass capacitors 10 nF must be placed close to V_{DD} and V_{ISOOUT} pins, less than 1 mm distance away from device pins. This is very essential for optimised radiated emissions performance. Ensure that these capacitors are 0402 size so that they offer least inductance (ESL).
- Bulk capacitors of atleast 10 µF must be placed on power converter input (V_{DD}) and output (V_{ISOOUT}) supply pins.
- Traces on V_{DD} and GND1 must be symmetric till bypass capacitors. Similarly traces on V_{ISOOUT} and GND2 must be symmetric.
- Place two 0402 size Ferrite beads (Part number: BLM15EX331SN1) on V_{ISOOUT} and GND2 path so that any high frequency noise from power converter output sees a high impedance before it goes to other components on PCB.
- Do not have any metal traces or ground pour within 4 mm of power converter output terminals V_{ISOOUT} pin12 and GND2 pin11. VSEL pin is also in V_{ISOOUT} domain and should be shorted to either pin 11 or pin 12 for output voltage selection.
- Following the layout guidelines of EVM as much as possible is highly recommended for a low radiated emissions design.

12.1.1 PCB Material

For digital circuit boards operating at less than 150 Mbps, (or rise and fall times greater than 1 ns), and trace lengths of up to 10 inches, use standard FR-4 UL94V-0 printed circuit board. This PCB is preferred over cheaper alternatives because of lower dielectric losses at high frequencies, less moisture absorption, greater strength and stiffness, and the self-extinguishing flammability-characteristics.

Copyright © 2023 Texas Instruments Incorporated

12.2 Layout Example

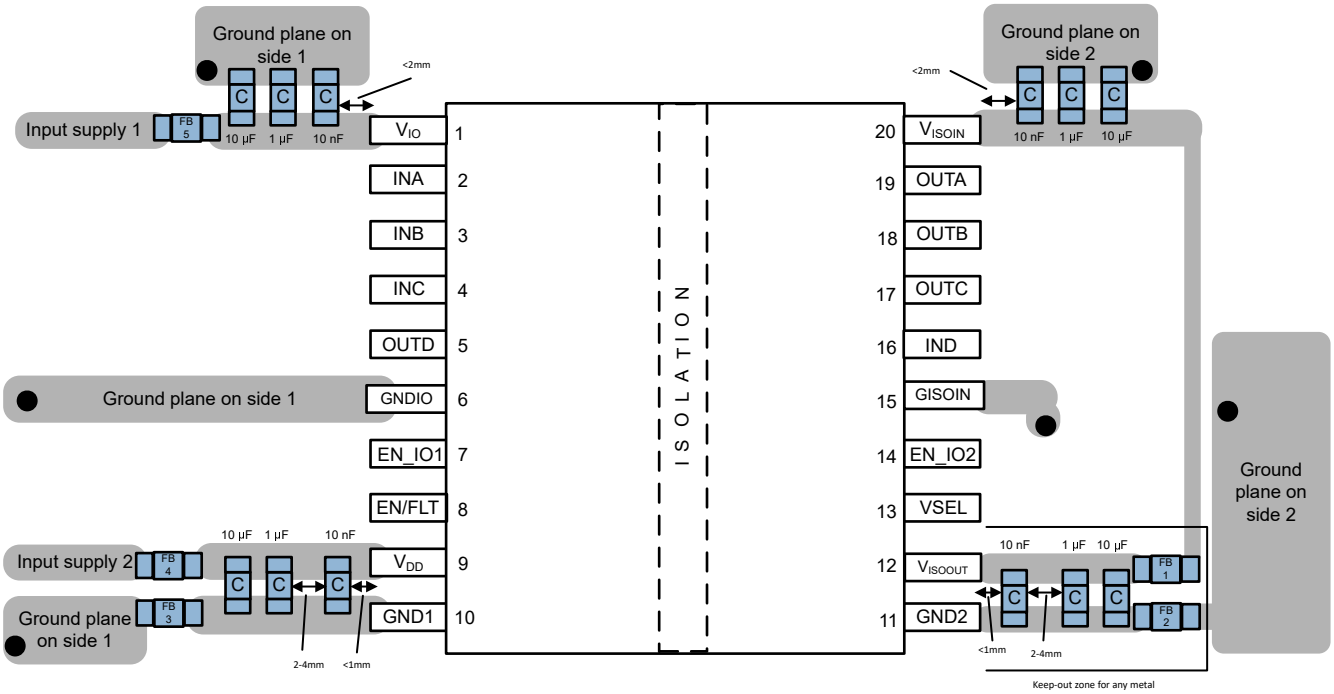

Figure 12-1. Layout Example

13 Device and Documentation Support

13.1 Device Support

13.1.1 Development Support

For development support, refer to:

- 8-ch Isolated High Voltage Analog Input Module with ISOW7841 Reference Design
- Isolated RS-485 With Integrated Signal and Power Reference Design
- Isolated RS-232 With Integrated Signal and Power Reference Design

13.2 Documentation Support

13.2.1 Related Documentation

For related documentation see the following:

- Texas Instruments, *Digital Isolator Design Guide*
- Texas Instruments, *Isolation Glossary*

13.3 Receiving Notification of Documentation Updates

To receive notification of documentation updates, navigate to the device product folder on ti.com. In the upper right corner, click on *Alert me* to register and receive a weekly digest of any product information that has changed. For change details, review the revision history included in any revised document.

13.4 Support Resources

TI E2E™ support forums are an engineer's go-to source for fast, verified answers and design help — straight from the experts. Search existing answers or ask your own question to get the quick design help you need.

Linked content is provided "AS IS" by the respective contributors. They do not constitute TI specifications and do not necessarily reflect TI's views; see TI's Terms of Use.

13.5 Trademarks

TI E2E™ is a trademark of Texas Instruments.
All trademarks are the property of their respective owners.

13.6 Electrostatic Discharge Caution

This integrated circuit can be damaged by ESD. Texas Instruments recommends that all integrated circuits be handled with appropriate precautions. Failure to observe proper handling and installation procedures can cause damage.

ESD damage can range from subtle performance degradation to complete device failure. Precision integrated circuits may be more susceptible to damage because very small parametric changes could cause the device not to meet its published specifications.

13.7 Glossary

TI Glossary	This glossary lists and explains terms, acronyms, and definitions.

Copyright © 2023 Texas Instruments Incorporated

14 Mechanical, Packaging, and Orderable Information

The following pages include mechanical, packaging, and orderable information. This information is the most current data available for the designated devices. This data is subject to change without notice and revision of this document. For browser-based versions of this data sheet, refer to the left-hand navigation.

PACKAGE OUTLINE

DFM0020A-C01

SOIC - 3.55 mm max height

SMALL OUTLINE PACKAGE

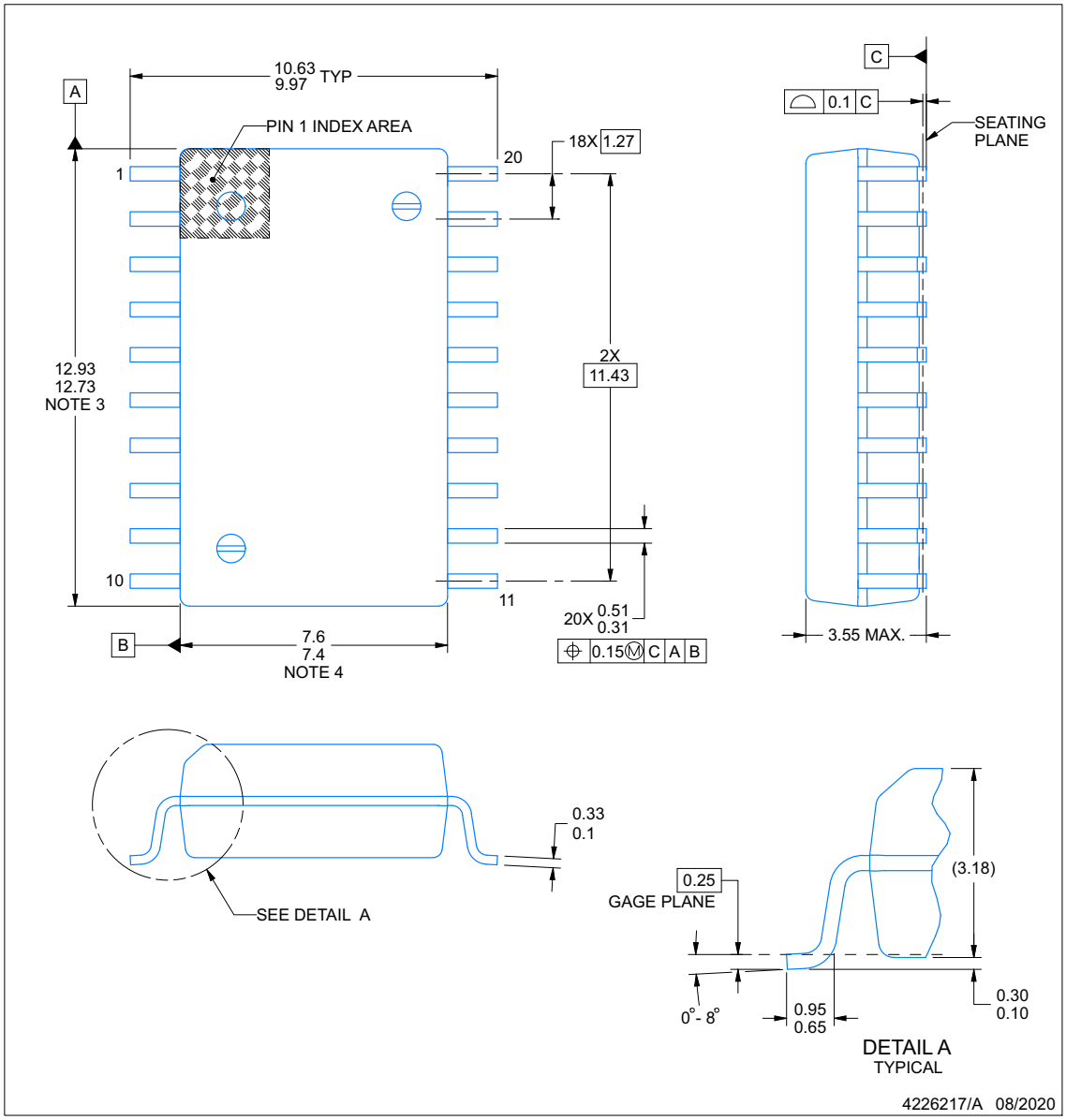

NOTES:

1. All linear dimensions are in millimeters. Any dimensions in parenthesis are for reference only. Dimensioning and tolerancing per ASME Y14.5M.
2. This drawing is subject to change without notice.
3. This dimension does not include mold flash, protrusions, or gate burrs. Mold flash, protrusions, or gate burrs shall not exceed 0.15 mm per side.
4. This dimension does not include interlead flash. Interlead flash shall not exceed 0.25 mm per side.
5. Ref. JEDEC registration MS-013

Copyright © 2023 Texas Instruments Incorporated

EXAMPLE BOARD LAYOUT

DFM0020A-C01 **SOIC - 3.55 mm max height**

SMALL OUTLINE PACKAGE

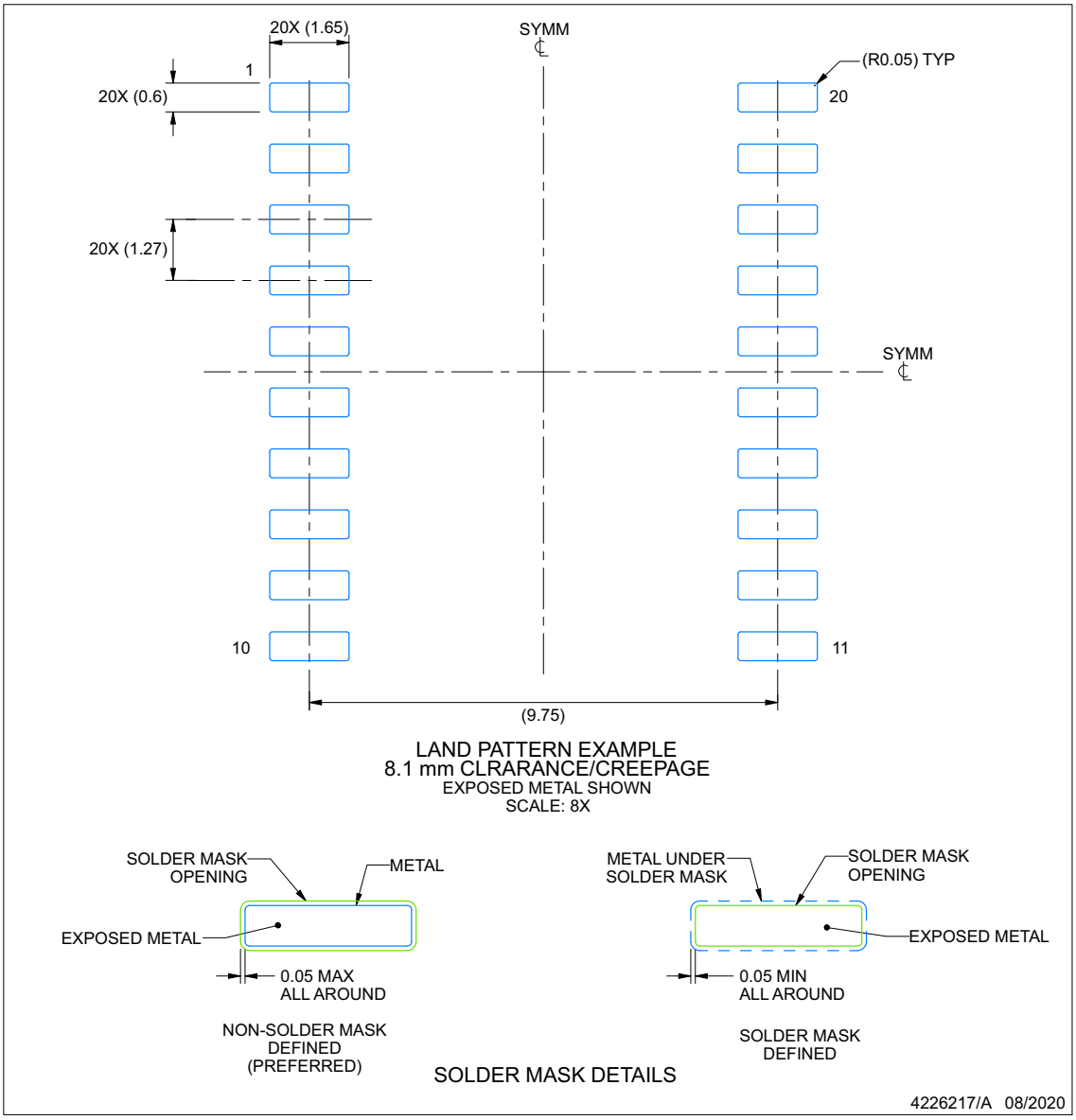

NOTES: (continued)

5. Publication IPC-7351 may have alternate designs.
6. Solder mask tolerances between and around signal pads can vary based on board fabrication site.

Copyright © 2023 Texas Instruments Incorporated

EXAMPLE STENCIL DESIGN

DFM0020A-C01 **SOIC - 3.55 mm max height**

SMALL OUTLINE PACKAGE

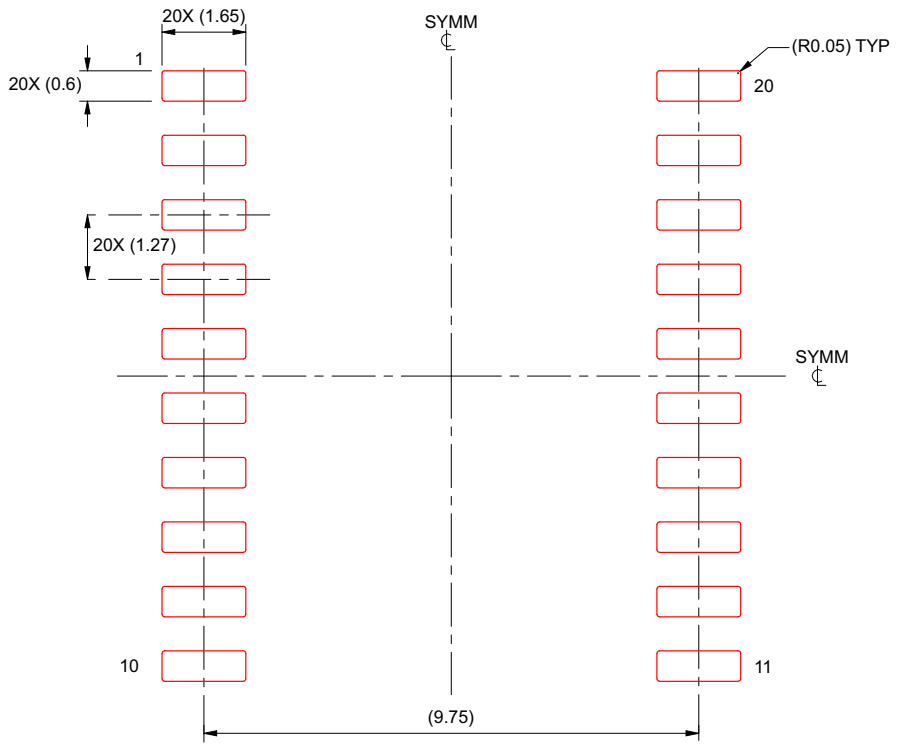

SOLDER PASTE EXAMPLE
8.1 mm CLEARANCE/CREEPAGE
BASED ON 0.125 mm THICK STENCIL
SCALE: 8X

4226217/A 08/2020

NOTES: (continued)

7. Laser cutting apertures with trapezoidal walls and rounded corners may offer better paste release. IPC-7525 may have alternate design recommendations.
8. Board assembly site may have different recommendations for stencil design.

Copyright © 2023 Texas Instruments Incorporated

PACKAGING INFORMATION

Orderable Device	Status (1)	Package Type	Package Drawing	Pins	Package Qty	Eco Plan (2)	Lead finish/ Ball material (6)	MSL Peak Temp (3)	Op Temp (°C)	Device Marking (4/5)	Samples
ISOW7740DFMR	ACTIVE	SOIC	DFM	20	850	RoHS & Green	NIPDAU	Level-3-260C-168 HR	-40 to 125	ISOW7740	Samples
ISOW7740FDFMR	ACTIVE	SOIC	DFM	20	850	RoHS & Green	NIPDAU	Level-3-260C-168 HR	-40 to 125	ISOW7740F	Samples
ISOW7741BDFMR	ACTIVE	SOIC	DFM	20	850	RoHS & Green	NIPDAU	Level-3-260C-168 HR	-40 to 125	ISOW7741	Samples
ISOW7741DFMR	ACTIVE	SOIC	DFM	20	850	RoHS & Green	NIPDAU	Level-3-260C-168 HR	-40 to 125	ISOW7741	Samples
ISOW7741FBDFMR	ACTIVE	SOIC	DFM	20	850	RoHS & Green	NIPDAU	Level-3-260C-168 HR	-40 to 125	ISOW7741F	Samples
ISOW7741FDFMR	ACTIVE	SOIC	DFM	20	850	RoHS & Green	NIPDAU	Level-3-260C-168 HR	-40 to 125	ISOW7741F	Samples
ISOW7742DFMR	ACTIVE	SOIC	DFM	20	850	RoHS & Green	NIPDAU	Level-3-260C-168 HR	-40 to 125	ISOW7742	Samples
ISOW7742FDFMR	ACTIVE	SOIC	DFM	20	850	RoHS & Green	NIPDAU	Level-3-260C-168 HR	-40 to 125	ISOW7742F	Samples
ISOW7743DFMR	ACTIVE	SOIC	DFM	20	850	RoHS & Green	NIPDAU	Level-3-260C-168 HR	-40 to 125	ISOW7743	Samples
ISOW7743FDFMR	ACTIVE	SOIC	DFM	20	850	RoHS & Green	NIPDAU	Level-3-260C-168 HR	-40 to 125	ISOW7743F	Samples
ISOW7744DFMR	ACTIVE	SOIC	DFM	20	850	RoHS & Green	NIPDAU	Level-3-260C-168 HR	-40 to 125	ISOW7744	Samples
ISOW7744FDFMR	ACTIVE	SOIC	DFM	20	850	RoHS & Green	NIPDAU	Level-3-260C-168 HR	-40 to 125	ISOW7744F	Samples

(1) The marketing status values are defined as follows:
ACTIVE: Product device recommended for new designs.
LIFEBUY: TI has announced that the device will be discontinued, and a lifetime-buy period is in effect.
NRND: Not recommended for new designs. Device is in production to support existing customers, but TI does not recommend using this part in a new design.
PREVIEW: Device has been announced but is not in production. Samples may or may not be available.
OBSOLETE: TI has discontinued the production of the device.

(2) **RoHS:** TI defines "RoHS" to mean semiconductor products that are compliant with the current EU RoHS requirements for all 10 RoHS substances, including the requirement that RoHS substance do not exceed 0.1% by weight in homogeneous materials. Where designed to be soldered at high temperatures, "RoHS" products are suitable for use in specified lead-free processes. TI may reference these types of products as "Pb-Free".
RoHS Exempt: TI defines "RoHS Exempt" to mean products that contain lead but are compliant with EU RoHS pursuant to a specific EU RoHS exemption.
Green: TI defines "Green" to mean the content of Chlorine (Cl) and Bromine (Br) based flame retardants meet JS709B low halogen requirements of <=1000ppm threshold. Antimony trioxide based flame retardants must also meet the <=1000ppm threshold requirement.

(3) MSL, Peak Temp. - The Moisture Sensitivity Level rating according to the JEDEC industry standard classifications, and peak solder temperature.

(4) There may be additional marking, which relates to the logo, the lot trace code information, or the environmental category on the device.

(5) Multiple Device Markings will be inside parentheses. Only one Device Marking contained in parentheses and separated by a "~" will appear on a device. If a line is indented then it is a continuation of the previous line and the two combined represent the entire Device Marking for that device.

(6) Lead finish/Ball material - Orderable Devices may have multiple material finish options. Finish options are separated by a vertical ruled line. Lead finish/Ball material values may wrap to two lines if the finish value exceeds the maximum column width.

Important Information and Disclaimer: The information provided on this page represents TI's knowledge and belief as of the date that it is provided. TI bases its knowledge and belief on information provided by third parties, and makes no representation or warranty as to the accuracy of such information. Efforts are underway to better integrate information from third parties. TI has taken and continues to take reasonable steps to provide representative and accurate information but may not have conducted destructive testing or chemical analysis on incoming materials and chemicals. TI and TI suppliers consider certain information to be proprietary, and thus CAS numbers and other limited information may not be available for release.

In no event shall TI's liability arising out of such information exceed the total purchase price of the TI part(s) at issue in this document sold by TI to Customer on an annual basis.

TAPE AND REEL INFORMATION

REEL DIMENSIONS

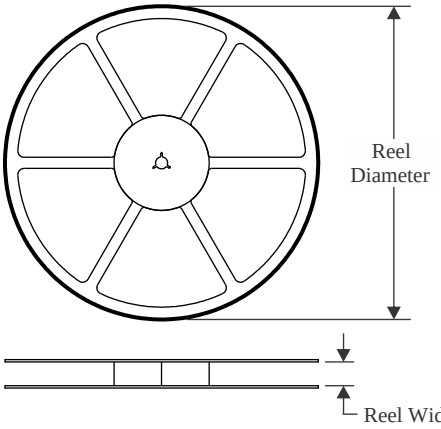

TAPE DIMENSIONS

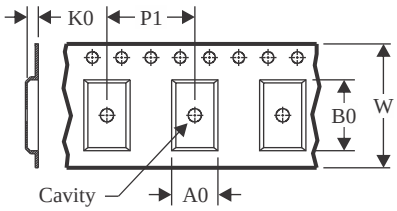

A0	Dimension designed to accommodate the component width
B0	Dimension designed to accommodate the component length
K0	Dimension designed to accommodate the component thickness
W	Overall width of the carrier tape
P1	Pitch between successive cavity centers

QUADRANT ASSIGNMENTS FOR PIN 1 ORIENTATION IN TAPE

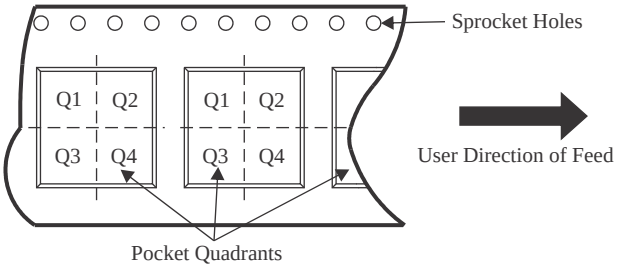

*All dimensions are nominal

Device	Package Type	Package Drawing	Pins	SPQ	Reel Diameter (mm)	Reel Width W1 (mm)	A0 (mm)	B0 (mm)	K0 (mm)	P1 (mm)	W (mm)	Pin1 Quadrant
ISOW7740DFMR	SOIC	DFM	20	850	330.0	24.4	10.85	13.4	4.0	16.0	24.0	Q1
ISOW7740FDFMR	SOIC	DFM	20	850	330.0	24.4	10.85	13.4	4.0	16.0	24.0	Q1
ISOW7741BDFMR	SOIC	DFM	20	850	330.0	24.4	10.85	13.4	4.0	16.0	24.0	Q1
ISOW7741DFMR	SOIC	DFM	20	850	330.0	24.4	10.85	13.4	4.0	16.0	24.0	Q1
ISOW7741FBDFMR	SOIC	DFM	20	850	330.0	24.4	10.85	13.4	4.0	16.0	24.0	Q1
ISOW7741FDFMR	SOIC	DFM	20	850	330.0	24.4	10.85	13.4	4.0	16.0	24.0	Q1
ISOW7742DFMR	SOIC	DFM	20	850	330.0	24.4	10.85	13.4	4.0	16.0	24.0	Q1
ISOW7742FDFMR	SOIC	DFM	20	850	330.0	24.4	10.85	13.4	4.0	16.0	24.0	Q1
ISOW7743DFMR	SOIC	DFM	20	850	330.0	24.4	10.85	13.4	4.0	16.0	24.0	Q1
ISOW7743FDFMR	SOIC	DFM	20	850	330.0	24.4	10.85	13.4	4.0	16.0	24.0	Q1
ISOW7744DFMR	SOIC	DFM	20	850	330.0	24.4	10.85	13.4	4.0	16.0	24.0	Q1
ISOW7744FDFMR	SOIC	DFM	20	850	330.0	24.4	10.85	13.4	4.0	16.0	24.0	Q1

TAPE AND REEL BOX DIMENSIONS

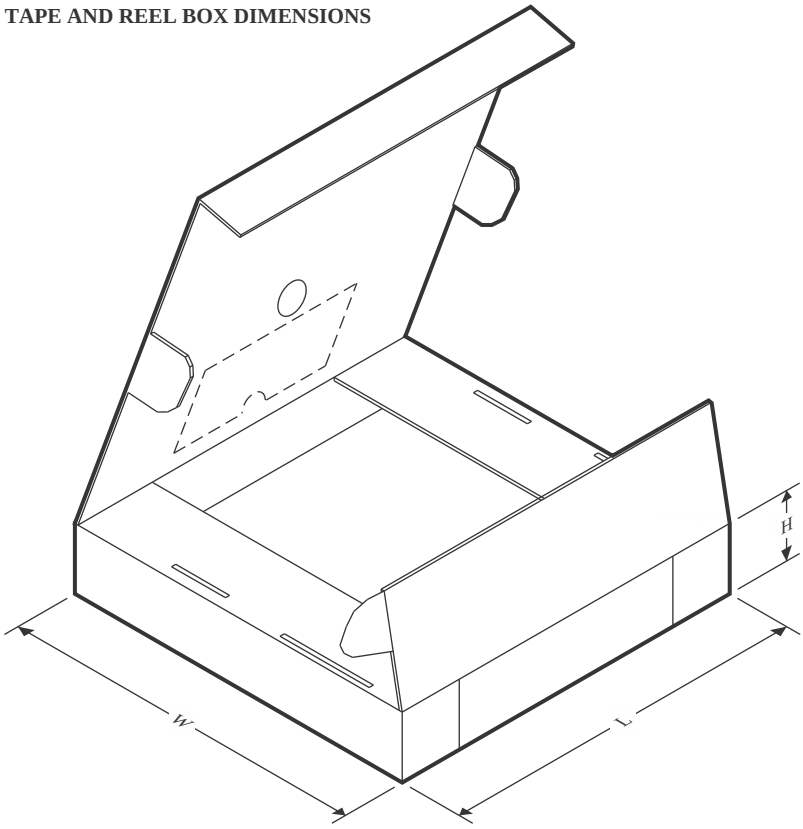

*All dimensions are nominal

Device	Package Type	Package Drawing	Pins	SPQ	Length (mm)	Width (mm)	Height (mm)
ISOW7740DFMR	SOIC	DFM	20	850	350.0	350.0	43.0
ISOW7740FDFMR	SOIC	DFM	20	850	350.0	350.0	43.0
ISOW7741BDFMR	SOIC	DFM	20	850	350.0	350.0	43.0
ISOW7741DFMR	SOIC	DFM	20	850	350.0	350.0	43.0
ISOW7741FBDFMR	SOIC	DFM	20	850	350.0	350.0	43.0
ISOW7741FDFMR	SOIC	DFM	20	850	350.0	350.0	43.0
ISOW7742DFMR	SOIC	DFM	20	850	350.0	350.0	43.0
ISOW7742FDFMR	SOIC	DFM	20	850	350.0	350.0	43.0
ISOW7743DFMR	SOIC	DFM	20	850	350.0	350.0	43.0
ISOW7743FDFMR	SOIC	DFM	20	850	350.0	350.0	43.0
ISOW7744DFMR	SOIC	DFM	20	850	350.0	350.0	43.0
ISOW7744FDFMR	SOIC	DFM	20	850	350.0	350.0	43.0

IMPORTANT NOTICE AND DISCLAIMER

TI PROVIDES TECHNICAL AND RELIABILITY DATA (INCLUDING DATA SHEETS), DESIGN RESOURCES (INCLUDING REFERENCE DESIGNS), APPLICATION OR OTHER DESIGN ADVICE, WEB TOOLS, SAFETY INFORMATION, AND OTHER RESOURCES “AS IS” AND WITH ALL FAULTS, AND DISCLAIMS ALL WARRANTIES, EXPRESS AND IMPLIED, INCLUDING WITHOUT LIMITATION ANY IMPLIED WARRANTIES OF MERCHANTABILITY, FITNESS FOR A PARTICULAR PURPOSE OR NON-INFRINGEMENT OF THIRD PARTY INTELLECTUAL PROPERTY RIGHTS.

These resources are intended for skilled developers designing with TI products. You are solely responsible for (1) selecting the appropriate TI products for your application, (2) designing, validating and testing your application, and (3) ensuring your application meets applicable standards, and any other safety, security, regulatory or other requirements.

These resources are subject to change without notice. TI grants you permission to use these resources only for development of an application that uses the TI products described in the resource. Other reproduction and display of these resources is prohibited. No license is granted to any other TI intellectual property right or to any third party intellectual property right. TI disclaims responsibility for, and you will fully indemnify TI and its representatives against, any claims, damages, costs, losses, and liabilities arising out of your use of these resources.

TI’s products are provided subject to TI’s Terms of Sale or other applicable terms available either on ti.com or provided in conjunction with such TI products. TI’s provision of these resources does not expand or otherwise alter TI’s applicable warranties or warranty disclaimers for TI products.

TI objects to and rejects any additional or different terms you may have proposed.

Mailing Address: Texas Instruments, Post Office Box 655303, Dallas, Texas 75265
Copyright © 2023, Texas Instruments Incorporated