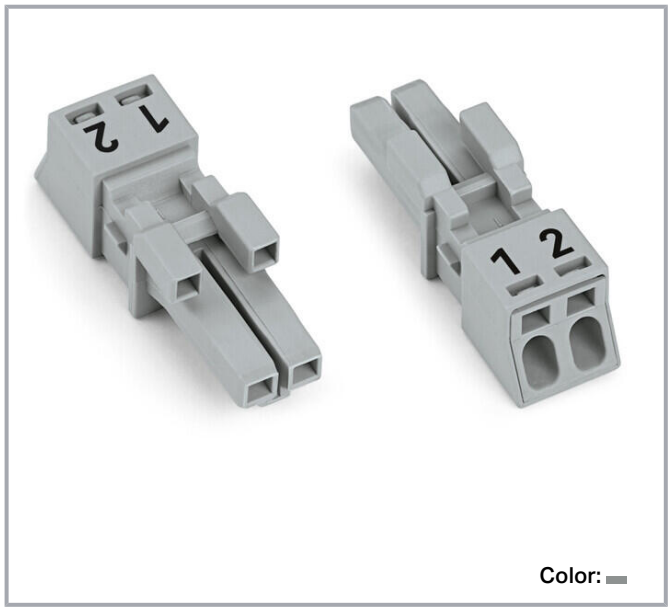

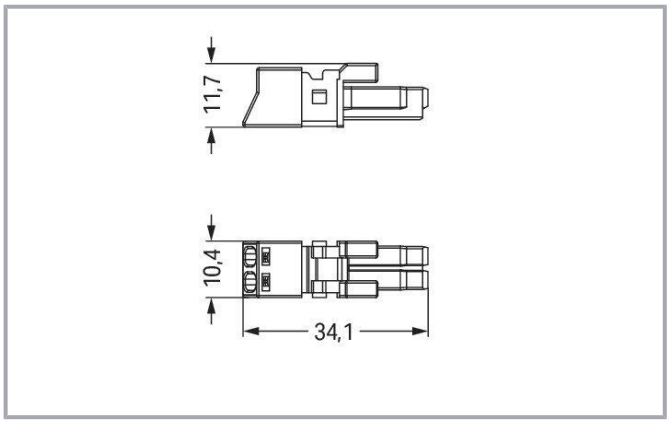

Item description

Female connector/socket *WINSTA*® MINI with protection type IP20

Use effective pluggable connections instead of laborious screw connections: With the *WINSTA*® MINI female connector/socket 2-pole. Our pluggable installation connectors with spring pressure connection technology work entirely without screw connections. They allow fast, efficient, error-free installation in a large number of applications. For greater security in electrical installations, the pluggable installation connector is equipped with mechanical protection against mismating. Pluggable installation connectors with B coding from the *WINSTA*® MINI line are available in gray, light green, or pink, allowing you to distinguish different circuits, for example for light, pumps or, sun blinds. Customer-specific pole marking is possible as well. Thanks to its particularly compact dimensions, our *WINSTA*® MINI Pluggable Connection System with Push-in CAGE CLAMP® spring pressure connection technology is especially suitable in very tight spaces, i.e., for connections when very little room is available.

Lower costs through fast commissioning and elimination of service expenses – solutions from *WINSTA*® MINI

WINSTA® is the pluggable connection system that is optimally tailored to the strict requirements of electrical installation. It allows fast, secure and, above all, error-free installation of components and cables. Choose quality and durability – the *WINSTA*® MINI pluggable installation connector with

Subject to changes. Please also observe the further product documentation!

WAGO GmbH & Co. KG
Hansastr. 27
32423 Minden
Phone: +49571 887-0 | Fax: +49571 887-169
Email: info.de@wago.com | Web: www.wago.com

Do you have any questions about our products?
We are always happy to take your call at +49 (571) 887-44222.

protection type IP20 from WAGO makes the electrical installation of electrical components visibly easier.

-
- effective protection against mismating
- easy tool-free operation, a wide range of coding options
- for automation controllers
- flexible installation to save space
- convenient installation and commissioning

Data
Notes

Variants:	Other pole markings Other versions (or variants) can be requested from WAGO Sales or configured at https://configurator.wago.com/.

Electrical data

Ratings per IEC/EN

Ratings per	IEC/EN 60664-1
Nominal voltage (III/3)	250 V
Rated impulse voltage (III/3)	4 kV
Rated current	16 A
Legend (ratings)	(III / 3) ≙ Overvoltage category III / Pollution degree 3

Ratings per UL 1977

Note for the US market	Some versions may also be used for current interruption in accordance with the UL certificate in select applications with currents below 5 A and voltages up to 600 V. For further information, please contact your local sales office.
Rated voltage (UL 1977)	600 V
Rated current UL 1977	14 A

General information

Note on contact resistance	approx. 1 mΩ of contact resistance approx. 0.25 mΩ contact transition plug/socket

Subject to changes. Please also observe the further product documentation!

WAGO GmbH & Co. KG
Hansastr. 27
32423 Minden
Phone: +49571 887-0 | Fax: +49571 887-169
Email: info.de@wago.com | Web: www.wago.com

Do you have any questions about our products?
We are always happy to take your call at +49 (571) 887-44222.

Connection data

Connection points	2
Total number of potentials	2

Connection 1

Connection technology	Push-in CAGE CLAMP®
Actuation type	Operating tool Push-in
Nominal cross-section	1.5 mm² / 16 AWG
Solid conductor	0.25 … 1.5 mm² / 22 … 16 AWG
Solid conductor; push-in termination	0.75 … 1.5 mm² / 20 … 16 AWG
Stranded conductor	0.25 … 1 mm² / 22 … 18 AWG
Fine-stranded conductor	0.25 … 1.5 mm² / 22 … 16 AWG
Fine-stranded conductor; with insulated ferrule	0.25 … 0.75 mm² / 22 … 20 AWG
Fine-stranded conductor; with uninsulated ferrule	0.25 … 0.75 mm² / 22 … 20 AWG
Fine-stranded conductor; with ferrule; push-in termination	0.75 mm² / 20 AWG
Strip length	9 mm / 0.35 inches
Pole number	2
Conductor entry direction to mating direction	0 °

Physical data

Pin spacing	4.4 mm / 0.173 inches
Width	10.4 mm / 0.409 inches
Height	11.7 mm / 0.461 inches
Depth	34.1 mm / 1.343 inches

Mechanical Data

Application	Control technology
Coding	B
Coding	No
Marking	1 2
Potential marking	1 2
Mating force of a plug-in connection	approx. 20 … 70 N (depending on pole number)
Retention force of a plug-in connection	Locked: > 80 N
Unmating force of a plug-in connection	Unlocked: approx. 20 … 70 N (depending on pole number)

Subject to changes. Please also observe the further product documentation!

WAGO GmbH & Co. KG
Hansastr. 27
32423 Minden
Phone: +49571 887-0 | Fax: +49571 887-169
Email: info.de@wago.com | Web: www.wago.com

Do you have any questions about our products?
We are always happy to take your call at +49 (571) 887-44222.

Mating cycles	200, without resistive load
Protection type	IP20; IP40 with strain relief housing

Plug-in connection

Contact type (pluggable connector)	Female connector/socket
Connector (connection type)	for conductor
Mismating protection	Yes
Mismating protection	All *WINSTA*® components are 100% protected against mismating when: a.) plugging different numbers of poles b.) plugging while rotated 180 c.) plugging while laterally staggered d.) plugging one pole
Locking lever	Can be retrofitted
Locking of plug-in connection	locking lever
Note on locking system	All connectors for mounted installations (snap-in versions for lighting fixtures or devices, all types of PCB and distribution connectors) are factory-equipped with locking levers to ensure plugs and sockets are securely locked. Additional locking levers are only required for flying leads (plug/socket).

Material Data

Note (material data)	Information on material specifications can be found here
Color	gray
Color	gray
Material group	I
Insulation material	Polyamide (PA66)
Flammability class per UL94	V0
Clamping spring material	Chrome-nickel spring steel (CrNi)
Contact material	Copper or copper alloy; surface-treated
Contact plating	Tin
Fire load	0.058 MJ
Weight	2.6 g

Environmental requirements

Processing temperature	-5 … +40 °C
Continuous operating temperature	-35 … +85 °C

Subject to changes. Please also observe the further product documentation!

WAGO GmbH & Co. KG
Hansastr. 27
32423 Minden
Phone: +49571 887-0 | Fax: +49571 887-169
Email: info.de@wago.com | Web: www.wago.com

Do you have any questions about our products?
We are always happy to take your call at +49 (571) 887-44222.

Note on continuous operating temperature	Insulating parts for temperatures ≤ 105 °C

Commercial data

Product Group	20 (Winsta)
eCl@ss 10.0	27-44-06-05
eCl@ss 10.0	27-44-06-05
ETIM 8.0	EC002560
ETIM 8.0	EC002560
PU (SPU)	50 pcs
Packaging type	box
Country of origin	PL
GTIN	4055143499583
Customs tariff number	85366990990

Environmental Product Compliance

RoHS Compliance Status	Compliant,No Exemption

Approvals / Certificates

General approvals

Logo	Approval	Additional Approval Text	Certificate name
	CB DEKRA Certification B.V.	EN 61984	71-112993
	CB DEKRA Certification B.V.	IEC 61984	NL-64351
	cURus Underwriters Laboratories Inc.	UL 1977	E45171
	KEMA/KEUR DEKRA Certification B.V.	EN 60320	2148952.04

Declarations of conformity and manufacturer's declarations

Logo	Approval	Additional Approval Text	Certificate name
	EU-Declaration of Conformity	-	-

Subject to changes. Please also observe the further product documentation!

WAGO GmbH & Co. KG
Hansastr. 27
32423 Minden
Phone: +49571 887-0 | Fax: +49571 887-169
Email: info.de@wago.com | Web: www.wago.com

Do you have any questions about our products?
We are always happy to take your call at +49 (571) 887-44222.

WAGO GmbH & Co. KG		
UK-Declaration of Conformity WAGO GmbH & Co. KG	-	-

Approvals for marine applications

Logo	Approval	Additional Approval Text	Certificate name
	DNV GL Det Norske Veritas, Germanischer Lloyd	-	TAE00001Z6
	LR Lloyds Register	EN 61535	08/20047 (E2)

Counterpart

	Item no.890-1601 T-distribution connector; 2-pole; Cod. B; 1 input; 2 outputs; 2 locking levers; gray	www.wago.com/890-1601
	Item no.890-1701 T-distribution connector; 2-pole; Cod. B; 1 input; 2 outputs; 3 locking levers; for flying leads; gray	www.wago.com/890-1701
	Item no.890-252 Plug; 2-pole; 1,50 mm²; gray	www.wago.com/890-252
	Item no.890-752 Snap-in plug; 2-pole; Cod. B; 1,50 mm²; gray	www.wago.com/890-752
	Item no.890-852 Plug for PCBs; straight; 2-pole; Cod. B; gray	www.wago.com/890-852
	Item no.890-852/011-000 Plug for PCBs; angled; 2-pole; Cod. B; gray	www.wago.com/890-852/011-000
	Item no.891-8992/005-103 pre-assembled interconnecting cable; Eca; Socket/plug; 2-pole; Cod. B; Control cable 2 x 1.0 mm²; 1 m; 1,00 mm²; gray	www.wago.com/891-8992/005-103

Subject to changes. Please also observe the further product documentation!

WAGO GmbH & Co. KG
Hansastr. 27
32423 Minden
Phone: +49571 887-0 | Fax: +49571 887-169
Email: info.de@wago.com | Web: www.wago.com

Do you have any questions about our products?
We are always happy to take your call at +49 (571) 887-44222.

Item no.891-8992/205-103
pre-assembled connecting cable; Eca; Plug/open-ended; 2-pole; Cod. B; Control cable 2 x 1.0 mm²; 1 m; 1,00 mm²; gray
www.wago.com/891-8992/205-103

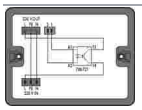

Item no.899-632/102-000
Distribution box; Relay switching; 2 inputs; 1 output; Cod. A, B; MINI, MIDI
www.wago.com/899-632/102-000

Required accessories

Strain relief

Strain relief housing

Item no.: 890-502
Strain relief housing; 2-pole; with locking clip; for 1 cable; 3.8 … 8.2 mm; 30 mm; black
www.wago.com/890-502

Item no.: 890-502/342-000
Strain relief housing; 2-pole; with locking clip; for 1 cable; 3.8 … 8.2 mm; 17.5 mm; black
www.wago.com/890-502/342-000

Item no.: 890-512
Strain relief housing; 2-pole; with locking clip; for 1 cable; 3.8 … 8.2 mm; 30 mm; white
www.wago.com/890-512

Item no.: 890-512/342-000
Strain relief housing; 2-pole; with locking clip; for 1 cable; 3.8 … 8.2 mm; 17.5 mm; white
www.wago.com/890-512/342-000

Locking levers

Locking system

Item no.: 890-111
Locking lever; for flying leads; for tool operation; black
www.wago.com/890-111

Item no.: 890-101
Locking lever; for manual operation; black
www.wago.com/890-101

Item no.: 890-121
Locking lever; for manual operation; white
www.wago.com/890-121

Item no.: 890-131
Locking lever; for flying leads; for tool operation; white
www.wago.com/890-131

Optional accessories

Mounting

Mounting accessories

Subject to changes. Please also observe the further product documentation!

WAGO GmbH & Co. KG
Hansastr. 27
32423 Minden
Phone: +49571 887-0 | Fax: +49571 887-169
Email: info.de@wago.com | Web: www.wago.com

Do you have any questions about our products?
We are always happy to take your call at +49 (571) 887-44222.

Item no.: 890-310
Mounting carrier; 2- to 5-pole; for flying leads; black

www.wago.com/890-310

Item no.: 890-311
Mounting carrier; 2- to 5-pole; for flying leads; white

www.wago.com/890-311

Tool

Operating tool

Item no.: 210-719
Operating tool; Blade: 2.5 x 0.4 mm; with a partially insulated shaft

www.wago.com/210-719

Item no.: 890-382
Operating tool; 2-way; green

www.wago.com/890-382

Cover

Cover

Item no.: 897-2001
Protective cap; Type1; for sockets and plugs; PVC; red

www.wago.com/897-2001

Downloads

Documentation

Bid Text

890-242 X81 - Datei	2019 年2月19 日	xml 3.0 kB	Download
890-242 doc - Datei	2015 年6月8 日	doc 23.6 kB	Download

CAD/CAE-Data

CAE data

EPLAN Data Portal 890-242	URL	Download
WSCAD Universe 890-242	URL	Download
ZUKEN Portal 890-242	URL	Download

Subject to changes. Please also observe the further product documentation!

WAGO GmbH & Co. KG
Hansastr. 27
32423 Minden
Phone: +49571 887-0 | Fax: +49571 887-169
Email: info.de@wago.com | Web: www.wago.com

Do you have any questions about our products?
We are always happy to take your call at +49 (571) 887-44222.

CAD data

2D/3D Models 890-242	URL	Download

Environmental Product Compliance

Compliance Search

Environmental Product Compliance 890-242 Socket; 2-pole; Cod. B; 1,50 mm²; gray	URL	Download

Installation Notes

Conductor termination

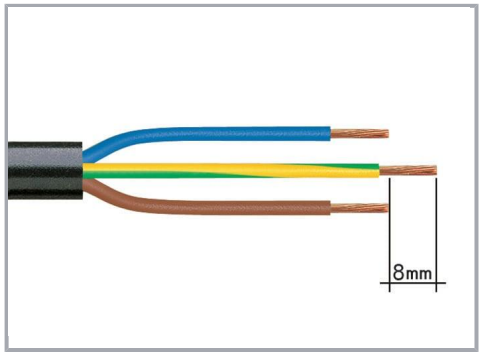

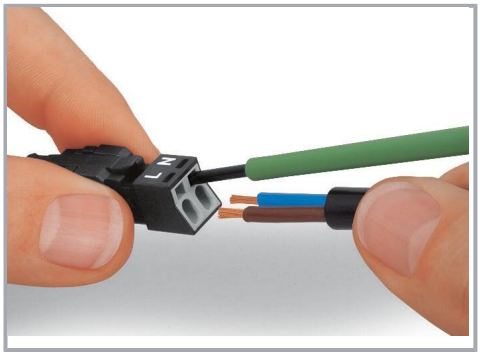

1. Strip length, outer insulation = 30 mm (2-pole), 37 mm (3-pole), 45 mm (4- and 5-pole)

2. Strip length = 9 mm

3. Extended ground conductor = 8 mm

To terminate fine-stranded conductors, open the clamping unit via screwdriver – 2.5 mm blade width – and insert a stripped conductor until it hits the backstop.
Terminate solid conductors by simply pushing them in.

Subject to changes. Please also observe the further product documentation!

WAGO GmbH & Co. KG
Hansastr. 27
32423 Minden
Phone: +49571 887-0 | Fax: +49571 887-169
Email: info.de@wago.com | Web: www.wago.com

Do you have any questions about our products?
We are always happy to take your call at +49 (571) 887-44222.

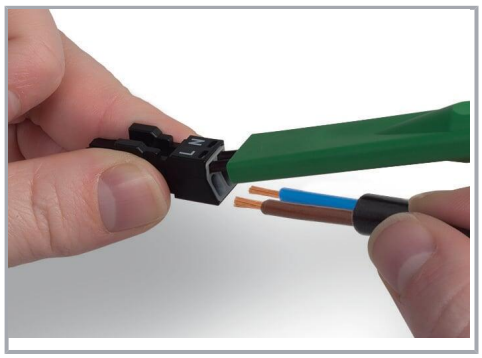

To terminate fine-stranded conductors, open clamping units via operating tool (890-382) and insert stripped conductors until they hit backstop.

Terminate solid conductors by simply pushing them in.

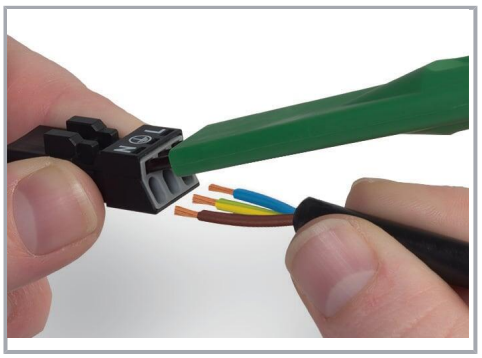

To terminate fine-stranded conductors, open clamping units via operating tool (890-383) and insert stripped conductors until they hit backstop.

Terminate solid conductors by simply pushing them in.

Installation

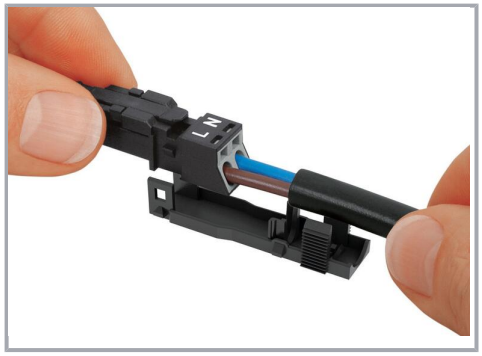

Latch the wired connector into the base of the strain relief housing.

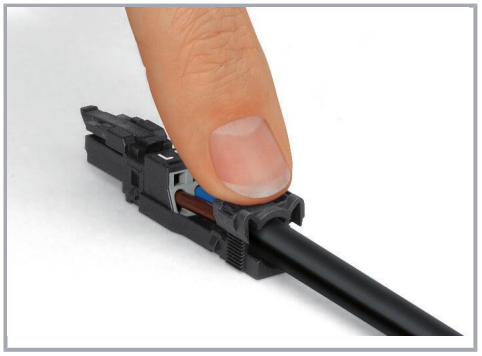

Push down strain relief clamp by hand.

WAGO GmbH & Co. KG
Hansastr. 27
32423 Minden
Phone: +49571 887-0 | Fax: +49571 887-169
Email: info.de@wago.com | Web: www.wago.com

Do you have any questions about our products?
We are always happy to take your call at +49 (571) 887-44222.

Push down strain relief clamp with 2.5 mm screwdriver alternately on both sides.

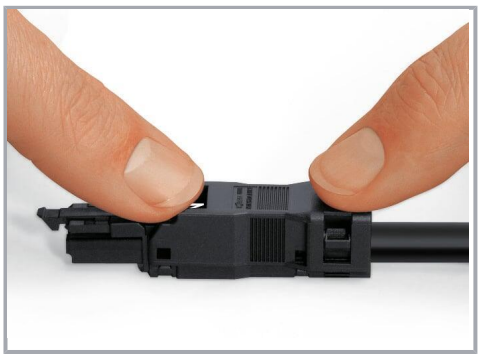

Latch the top of the strain relief housing.

The printed marking of the connector is clearly visible in the openings of the strain relief housing.

Mismating protection

WAGO GmbH & Co. KG
Hansastr. 27
32423 Minden
Phone: +49571 887-0 | Fax: +49571 887-169
Email: info.de@wago.com | Web: www.wago.com

Do you have any questions about our products?
We are always happy to take your call at +49 (571) 887-44222.

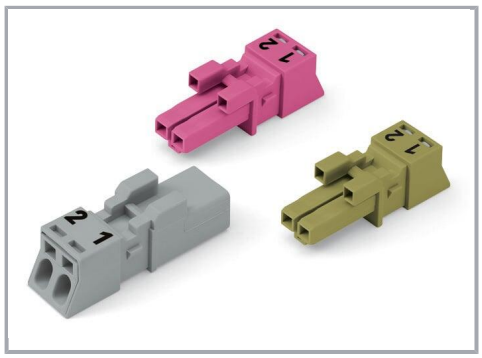

B-coded connectors with different colors can be plugged together.

Important note:
Different colors and/or pole markings are used for circuit identification.
Only connectors of the same color and same pole marking must be plugged together.

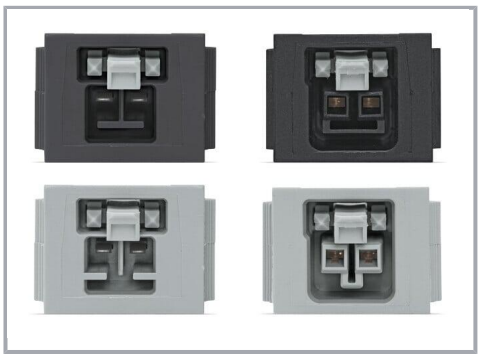

B-coded connectors (shown in gray) not only differ in color, but also in their design, making them incompatible with other coded connectors.

Product family

WINSTA® MINI
Show all products from the family

Subject to changes. Please also observe the further product documentation!

WAGO GmbH & Co. KG
Hansastr. 27
32423 Minden
Phone: +49571 887-0 | Fax: +49571 887-169
Email: info.de@wago.com | Web: www.wago.com

Do you have any questions about our products?
We are always happy to take your call at +49 (571) 887-44222.