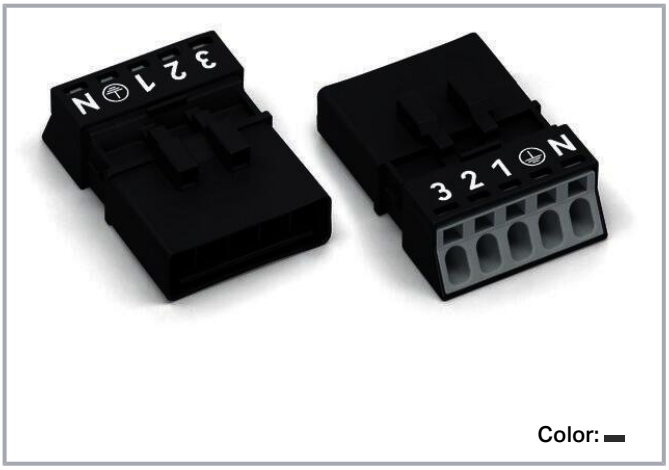

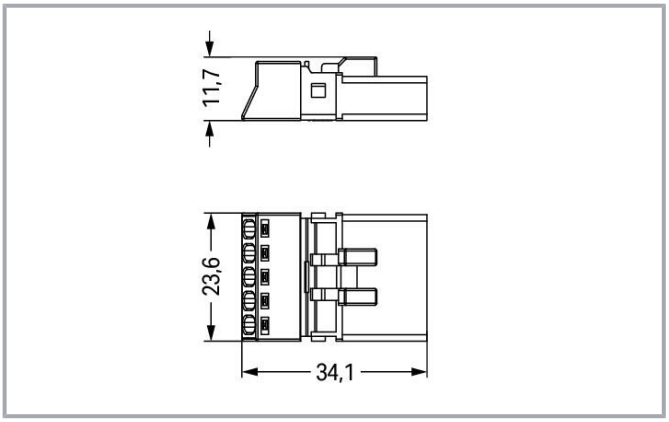

Item description

Male connector/plug *WINSTA*® MINI with protection type IP20

The *WINSTA*® MINI male connector/plug with protection against mismating supports rapid, correct installation. Our pluggable installation connectors with spring pressure connection technology function entirely without screw connections. They allow resource-efficient, error-free installation in a large number of applications. The mechanical coding and color coding of the pluggable installation connector ensure error-free installation of the individual components – including protection against mismating. The *WINSTA*® MINI pluggable installation connector with A coding in black or white is usually used for general mains applications in power distribution. Thanks to its particularly small dimensions, our *WINSTA*® MINI Pluggable Connection System with Push-in CAGE CLAMP® spring pressure connection technology is very suitable in very tight spaces, i.e., for connections when very little room is available.

WINSTA® MINI solutions for your electrical installation – protected against mismating and maintenance-free

WINSTA® is the pluggable connection system that is optimally tailored to the strict requirements of electrical installation. It ensures fast, secure and, above all, error-free installation of components and cables. Now you can also lower installation expenses without compromising quality and safety: The *WINSTA*® MINI pluggable installation connector with protection against mismating reduces the need for servicing and prevents unnecessary downtime.

-
- pluggable installation connectors with protection against mismating

Subject to changes. Please also observe the further product documentation!

WAGO GmbH & Co. KG
Hansastr. 27
32423 Minden
Phone: +49571 887-0 | Fax: +49571 887-169
Email: info.de@wago.com | Web: www.wago.com

Do you have any questions about our products?
We are always happy to take your call at +49 (571) 887-44222.

- consistent IP40 protection
- suitable for any application
- flexible installation to save space
- quick replacement of defective units during ongoing operation

Data
Electrical data

Ratings per IEC/EN

Ratings per	IEC/EN 60664-1
Nominal voltage (III/3)	400 V
Rated impulse voltage (III/3)	6 kV
Rated current	13 A
Legend (ratings)	(III / 3) ≙ Overvoltage category III / Pollution degree 3

Ratings per UL 1977

Note for the US market	Some versions may also be used for current interruption in accordance with the UL certificate in select applications with currents below 5 A and voltages up to 600 V. For further information, please contact your local sales office.
Rated voltage (UL 1977)	600 V
Rated current UL 1977	12 A

General information

Note on contact resistance	approx. 1 mΩ of contact resistance approx. 0.25 mΩ contact transition plug/socket

Connection data

Connection points	5
Total number of potentials	5

Connection 1

Connection technology	Push-in CAGE CLAMP®
Actuation type	Operating tool Push-in
Nominal cross-section	1.5 mm² / 16 AWG
Solid conductor	0.25 … 1.5 mm² / 22 … 16 AWG

Subject to changes. Please also observe the further product documentation!

WAGO GmbH & Co. KG
Hansastr. 27
32423 Minden
Phone: +49571 887-0 | Fax: +49571 887-169
Email: info.de@wago.com | Web: www.wago.com

Do you have any questions about our products?
We are always happy to take your call at +49 (571) 887-44222.

Solid conductor; push-in termination	0.75 … 1.5 mm² / 20 … 16 AWG
Stranded conductor	0.25 … 1 mm² / 22 … 18 AWG
Fine-stranded conductor	0.25 … 1.5 mm² / 22 … 16 AWG
Fine-stranded conductor; with insulated ferrule	0.25 … 0.75 mm² / 22 … 20 AWG
Fine-stranded conductor; with uninsulated ferrule	0.25 … 0.75 mm² / 22 … 20 AWG
Fine-stranded conductor; with ferrule; push-in termination	0.75 mm² / 20 AWG
Strip length	9 mm / 0.35 inches
Pole number	5
Conductor entry direction to mating direction	0 °

Physical data

Pin spacing	4.4 mm / 0.173 inches
Width	23.6 mm / 0.929 inches
Height	11.7 mm / 0.461 inches
Depth	34.1 mm / 1.343 inches

Mechanical Data

Application	General mains applications
Coding	A
Coding	Yes
Marking	3 2 1 ⏚ N
Potential marking	3 2 1 ⏚ N
Mating force of a plug-in connection	approx. 20 … 70 N (depending on pole number)
Retention force of a plug-in connection	Locked: > 80 N
Unmating force of a plug-in connection	Unlocked: approx. 20 … 70 N (depending on pole number)
Mating cycles	200, without resistive load
Protection type	IP20; IP40 when mated with strain relief housing

Plug-in connection

Contact type (pluggable connector)	Male connector/plug
Connector (connection type)	for conductor
Mismating protection	Yes
Mismating protection	All *WINSTA*® components are 100% protected against mismating when: a.) plugging different numbers of poles b.) plugging while rotated 180

Subject to changes. Please also observe the further product documentation!

WAGO GmbH & Co. KG
Hansastr. 27
32423 Minden
Phone: +49571 887-0 | Fax: +49571 887-169
Email: info.de@wago.com | Web: www.wago.com

Do you have any questions about our products?
We are always happy to take your call at +49 (571) 887-44222.

	c.) plugging while laterally staggered d.) plugging one pole
Locking lever	Can be retrofitted
Locking of plug-in connection	locking lever
Note on locking system	All connectors for mounted installations (snap-in versions for lighting fixtures or devices, all types of PCB and distribution connectors) are factory-equipped with locking levers to ensure plugs and sockets are securely locked. Additional locking levers are only required for flying leads (plug/socket).

Material Data

Note (material data)	Information on material specifications can be found here
Color	black
Color	gray
Material group	I
Insulation material	Polyamide (PA66)
Flammability class per UL94	V0
Clamping spring material	Chrome-nickel spring steel (CrNi)
Contact material	Copper or copper alloy; surface-treated
Contact plating	Tin
Fire load	0.141 MJ
Weight	5.6 g

Environmental requirements

Processing temperature	-5 … +40 °C
Continuous operating temperature	-35 … +85 °C
Note on continuous operating temperature	Insulating parts for temperatures ≤ 105 °C

Commercial data

Product Group	20 (Winsta)
eCl@ss 10.0	27-44-06-05
eCl@ss 10.0	27-44-06-05
ETIM 8.0	EC002560
ETIM 8.0	EC002560
PU (SPU)	50 pcs
Packaging type	box

Subject to changes. Please also observe the further product documentation!

WAGO GmbH & Co. KG
Hansastr. 27
32423 Minden
Phone: +49571 887-0 | Fax: +49571 887-169
Email: info.de@wago.com | Web: www.wago.com

Do you have any questions about our products?
We are always happy to take your call at +49 (571) 887-44222.

Country of origin	PL
GTIN	4055143548595
Customs tariff number	85366990990

Environmental Product Compliance

RoHS Compliance Status	Compliant,No Exemption

Approvals / Certificates

General approvals

Logo	Approval	Additional Approval Text	Certificate name
	CCA DEKRA Certification B.V.	EN 61535	71-123231
	CCA DEKRA Certification B.V.	IEC 61535	NL-85020
	cURus Underwriters Laboratories Inc.	UL 1977	E45171

Declarations of conformity and manufacturer's declarations

Logo	Approval	Additional Approval Text	Certificate name
	EU-Declaration of Conformity WAGO GmbH & Co. KG	-	-
	UK-Declaration of Conformity WAGO GmbH & Co. KG	-	-

Approvals for marine applications

Logo	Approval	Additional Approval Text	Certificate name
	ABS American Bureau of Shipping	Steel Vessel Rules	19-HG1869855-PDA
	DNV GL	-	TAE00001Z6

Subject to changes. Please also observe the further product documentation!

WAGO GmbH & Co. KG
Hansastr. 27
32423 Minden
Phone: +49571 887-0 | Fax: +49571 887-169
Email: info.de@wago.com | Web: www.wago.com

Do you have any questions about our products?
We are always happy to take your call at +49 (571) 887-44222.

Det Norske Veritas, Germanischer Lloyd

LR Lloyds Register	EN 61535	08/20047 (E2)

Counterpart

	Item no.890-105 Socket; with strain relief housing; 5-pole; Cod. A; 1,50 mm²; black	www.wago.com/890-105
	Item no.890-205 Socket; 5-pole; Cod. A; 1,50 mm²; black	www.wago.com/890-205
	Item no.890-621 T-distribution connector; 5-pole; Cod. A; 1 input; 2 outputs; 2 locking levers; black	www.wago.com/890-621
	Item no.890-622 T-distribution connector; 5-pole; Cod. A; 1 input; 2 outputs; 3 locking levers; for flying leads; black	www.wago.com/890-622
	Item no.890-705 Snap-in socket; 5-pole; Cod. A; 1,50 mm²; black	www.wago.com/890-705
	Item no.890-705/006-000 Snap-in socket; without locking lever; 5-pole; Cod. A; 1,50 mm²; black	www.wago.com/890-705/006-000
	Item no.890-805/011-000 Socket for PCBs; angled; 5-pole; Cod. A; black	www.wago.com/890-805/011-000
	Item no.890-805 Socket for PCBs; straight; 5-pole; Cod. A; black	www.wago.com/890-805
	Item no.890-930 h-distribution connector; 5-pole; Cod. A; 1 input; 2 outputs; outputs on one side; 3 locking levers; for flying leads; black	www.wago.com/890-930
	Item no.890-929 h-distribution connector; 5-pole; Cod. A; 1 input; 2 outputs; outputs on one side; 2 locking levers; black	www.wago.com/890-929
	Item no.891-8995/006-101 pre-assembled interconnecting cable; Eca; Socket/plug; 5-pole; Cod. A; H05VV-F 5G 1.5 mm²; 1 m; 1,50 mm²; black	www.wago.com/891-8995/006-101
	Item no.891-8995/106-101	www.wago.com/891-8995

Subject to changes. Please also observe the further product documentation!

WAGO GmbH & Co. KG
Hansastr. 27
32423 Minden
Phone: +49571 887-0 | Fax: +49571 887-169
Email: info.de@wago.com | Web: www.wago.com

Do you have any questions about our products?
We are always happy to take your call at +49 (571) 887-44222.

pre-assembled connecting cable; Eca; Socket/open-ended; 5-pole; Cod. A; H05VV-F 5G 1.5 mm²; 1 m; 1,50 mm²; black /106-101

Required accessories

Locking levers

Locking system

Item no.: 890-111
Locking lever; for flying leads; for tool operation; black
www.wago.com/890-111

Item no.: 890-101
Locking lever; for manual operation; black
www.wago.com/890-101

Item no.: 890-121
Locking lever; for manual operation; white
www.wago.com/890-121

Item no.: 890-131
Locking lever; for flying leads; for tool operation; white
www.wago.com/890-131

Strain relief

Strain relief housing

Item no.: 890-505
Strain relief housing; 5-pole; with locking clip; for 1 cable; 6.5 … 10.5 mm; 45 mm; black
www.wago.com/890-505

Item no.: 890-515
Strain relief housing; 5-pole; with locking clip; for 1 cable; 6.5 … 10.5 mm; 45 mm; white
www.wago.com/890-515

Optional accessories

Cover

Cover

Item no.: 897-2003
Protective cap; Type2; for sockets and plugs; PVC; red
www.wago.com/897-2003

Shield termination

Shield termination

Item no.: 890-527
Shield connecting plate; 5-pole; for plugs
www.wago.com/890-527

Mounting

Subject to changes. Please also observe the further product documentation!

WAGO GmbH & Co. KG
Hansastr. 27
32423 Minden
Phone: +49571 887-0 | Fax: +49571 887-169
Email: info.de@wago.com | Web: www.wago.com

Do you have any questions about our products?
We are always happy to take your call at +49 (571) 887-44222.

Mounting accessories

Item no.: 890-310
Mounting carrier; 2- to 5-pole; for flying leads; black

www.wago.com/890-310

Item no.: 890-311
Mounting carrier; 2- to 5-pole; for flying leads; white

www.wago.com/890-311

Tool

Operating tool

Item no.: 210-719
Operating tool; Blade: 2.5 x 0.4 mm; with a partially insulated shaft

www.wago.com/210-719

Item no.: 890-385
Operating tool; 5-way; green

www.wago.com/890-385

Downloads

Documentation

Bid Text

890-215 X81 - Datei	2019 年2月19 日	xml 3.0 kB	Download
890-215 doc - Datei	2015 年6月8日	doc 23.6 kB	Download

CAD/CAE-Data

CAE data

ZUKEN Portal 890-215	URL	Download
WSCAD Universe 890-215	URL	Download

CAD data

2D/3D Models 890-215	URL	Download

Subject to changes. Please also observe the further product documentation!

WAGO GmbH & Co. KG
Hansastr. 27
32423 Minden
Phone: +49571 887-0 | Fax: +49571 887-169
Email: info.de@wago.com | Web: www.wago.com

Do you have any questions about our products?
We are always happy to take your call at +49 (571) 887-44222.

Environmental Product Compliance

Compliance Search

Environmental Product Compliance 890-215 Plug; 5-pole; Cod. A; 1,50 mm²; black	URL	Download

Installation Notes

Conductor termination

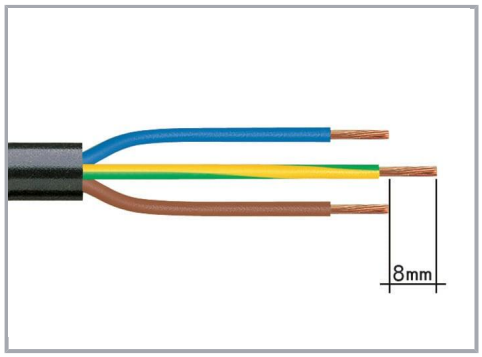

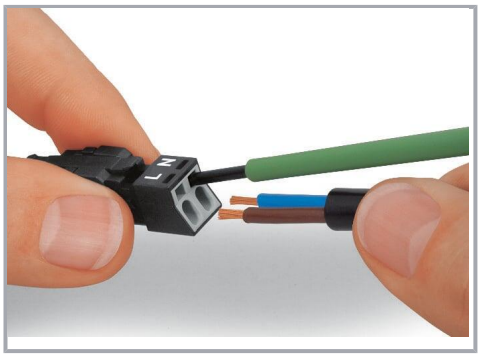

1. Strip length, outer insulation = 30 mm (2-pole), 37 mm (3-pole), 45 mm (4- and 5-pole)

2. Strip length = 9 mm

3. Extended ground conductor = 8 mm

To terminate fine-stranded conductors, open the clamping unit via screwdriver – 2.5 mm blade width – and insert a stripped conductor until it hits the backstop.
Terminate solid conductors by simply pushing them in.

Subject to changes. Please also observe the further product documentation!

WAGO GmbH & Co. KG
Hansastr. 27
32423 Minden
Phone: +49571 887-0 | Fax: +49571 887-169
Email: info.de@wago.com | Web: www.wago.com

Do you have any questions about our products?
We are always happy to take your call at +49 (571) 887-44222.

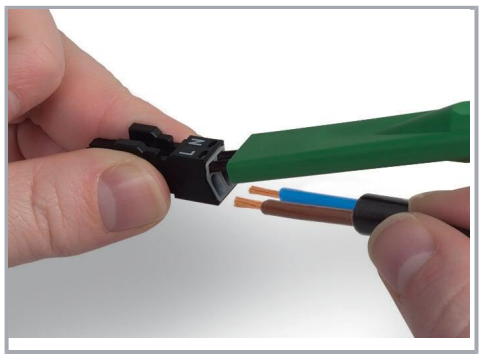

To terminate fine-stranded conductors, open clamping units via operating tool (890-382) and insert stripped conductors until they hit backstop.

Terminate solid conductors by simply pushing them in.

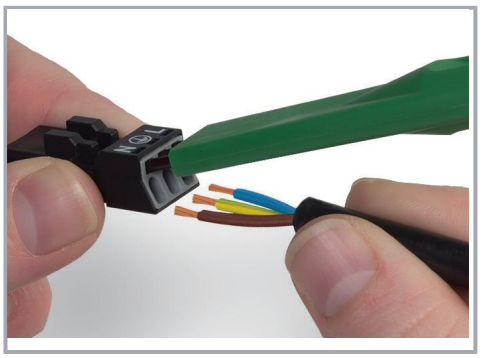

To terminate fine-stranded conductors, open clamping units via operating tool (890-383) and insert stripped conductors until they hit backstop.

Terminate solid conductors by simply pushing them in.

Installation

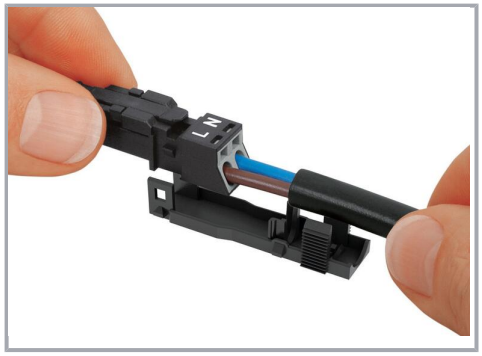

Latch the wired connector into the base of the strain relief housing.

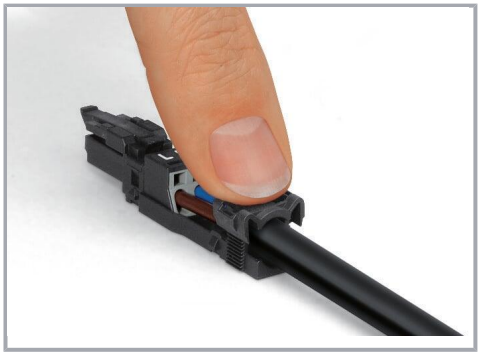

Push down strain relief clamp by hand.

WAGO GmbH & Co. KG
Hansastr. 27
32423 Minden
Phone: +49571 887-0 | Fax: +49571 887-169
Email: info.de@wago.com | Web: www.wago.com

Do you have any questions about our products?
We are always happy to take your call at +49 (571) 887-44222.

Push down strain relief clamp with 2.5 mm screwdriver alternately on both sides.

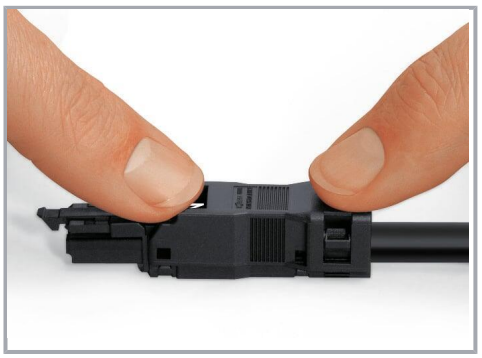

Latch the top of the strain relief housing.

The printed marking of the connector is clearly visible in the openings of the strain relief housing.

Shield termination

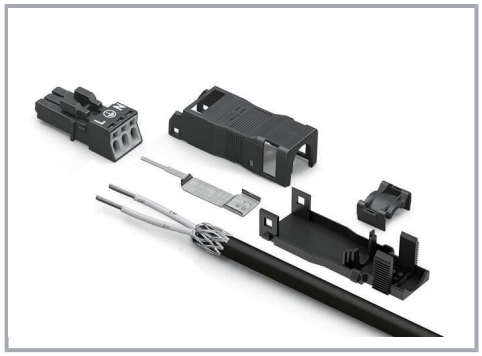

Connector with shield termination

Subject to changes. Please also observe the further product documentation!

WAGO GmbH & Co. KG
Hansastr. 27
32423 Minden
Phone: +49571 887-0 | Fax: +49571 887-169
Email: info.de@wago.com | Web: www.wago.com

Do you have any questions about our products?
We are always happy to take your call at +49 (571) 887-44222.

Apply the shield to the sheathed cable.

Strip length, outer insulation = 30 mm

Shield length = 8 mm

Push the shield connecting plate into the connector until fully inserted.

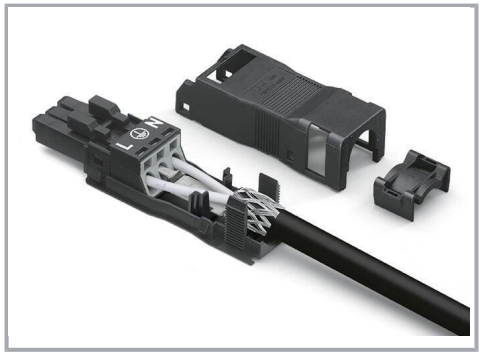

First insert the wired connector into strain relief housing, then snap clamp and cover.

Product family

WINSTA® MINI
Show all products from the family

Subject to changes. Please also observe the further product documentation!

WAGO GmbH & Co. KG
Hansastr. 27
32423 Minden
Phone: +49571 887-0 | Fax: +49571 887-169
Email: info.de@wago.com | Web: www.wago.com

Do you have any questions about our products?
We are always happy to take your call at +49 (571) 887-44222.