Data sheet | Item number: 831-3604

THT male header; 1.0 x 1.2 mm solder pin; straight; 100% protected against mismating; Pin spacing 7.62 mm; 4-pole; light gray

www.wago.com/831-3604

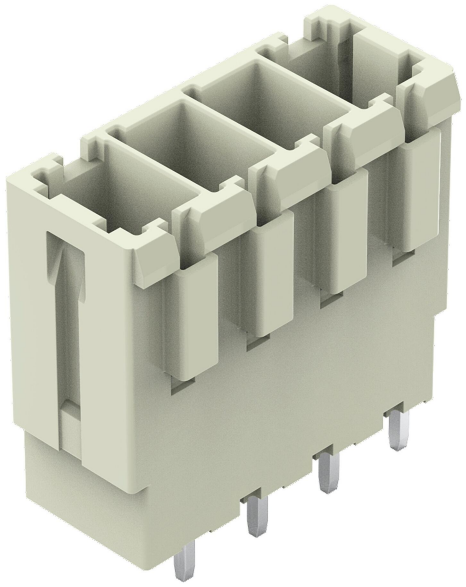

Picture differs from the item.

Color:

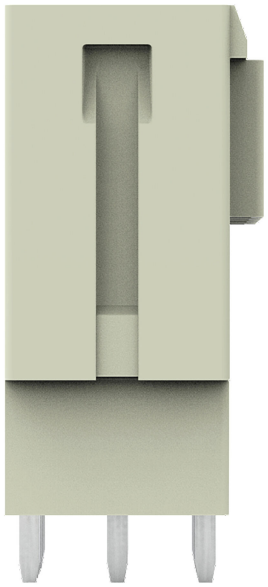

Subject to changes. Please also observe the further product documentation!

WAGO GmbH & Co. KG
Hansastr. 27
32423 Minden
Phone: +49571 887-0 | Fax: +49571 887-169
Email: info.de@wago.com | Web: www.wago.com

Do you have any questions about our products?
We are always happy to take your call at +49 (571) 887-44222.

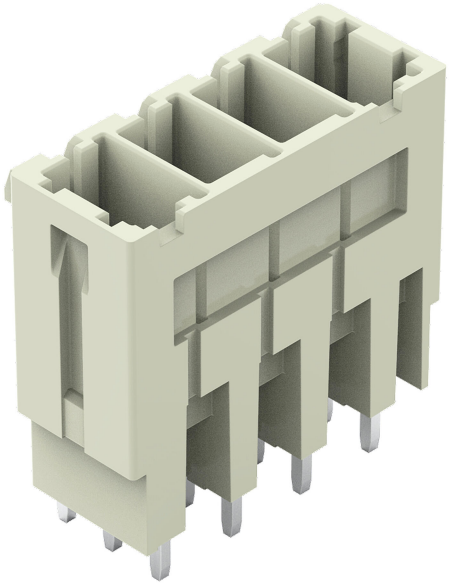

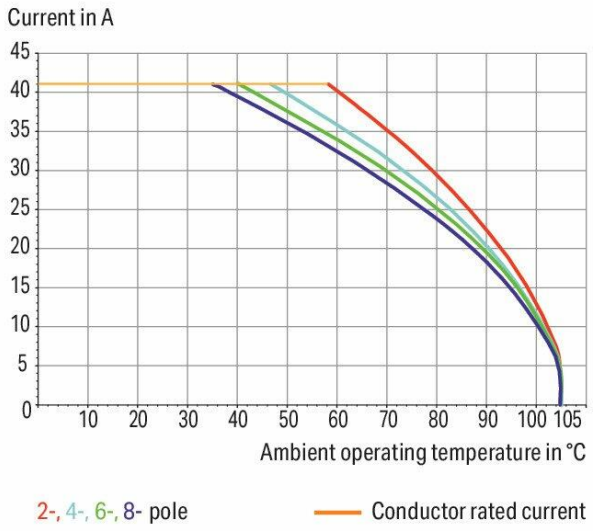

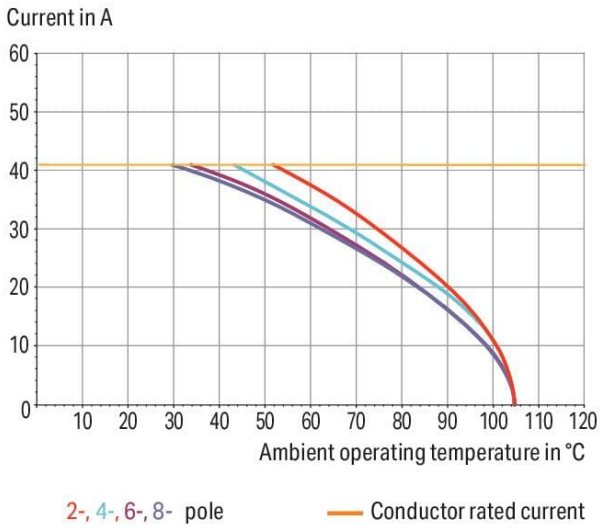

Subject to changes. Please also observe the further product documentation!

WAGO GmbH & Co. KG
Hansastr. 27
32423 Minden
Phone: +49571 887-0 | Fax: +49571 887-169
Email: info.de@wago.com | Web: www.wago.com

Do you have any questions about our products?
We are always happy to take your call at +49 (571) 887-44222.

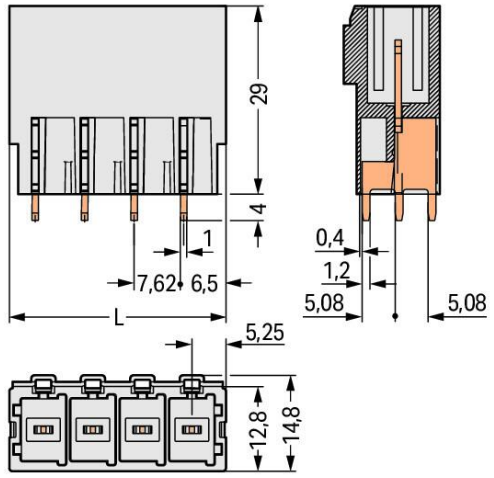

Dimensions in mm

L = (pole no. – 1) x pin spacing + 10.5 mm

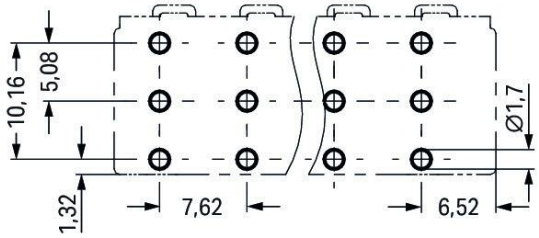

Item description

- Male headers may be mounted horizontally or vertically via straight or angled solder pins
- Three solder pins per pole provide high electrical and mechanical stability
- 100 % protected against mismating
- Coding via coding fingers

Data

Notes

Safety information	The *MCS – MULTI CONNECTION SYSTEM* includes connectors without breaking capacity in accordance with DIN EN 61984. When used as intended, these connectors must not be connected /disconnected when live or under load.When used as intended, these connectors must not be connected/disconnected when live or under load. The circuit design should ensure header pins, which can be touched, are not live when unmated.
Variants:	Other pole numbers Protection against PCB mounting errors Other versions (or variants) can be requested from WAGO Sales or configured at https://configurator.wago.com/.

Electrical data

Subject to changes. Please also observe the further product documentation!

WAGO GmbH & Co. KG
Hansastr. 27
32423 Minden
Phone: +49571 887-0 | Fax: +49571 887-169
Email: info.de@wago.com | Web: www.wago.com

Do you have any questions about our products?
We are always happy to take your call at +49 (571) 887-44222.

Ratings per IEC/EN

Ratings per	IEC/EN 60664-1
Nominal voltage (III/3)	500 V
Rated impulse voltage (III/3)	6 kV
Rated voltage (III/2)	630 V
Rated impulse voltage (III/2)	6 kV
Nominal voltage (II/2)	1000 V
Rated surge voltage (II/2)	6 kV
Rated current	41 A
Legend (ratings)	(III / 2) ≙ Overvoltage category III / Pollution degree 2

Ratings per UL 1059

Approvals per	UL 1059
Rated voltage UL (Use Group C)	300 V
Rated current UL (Use Group C)	42 A
Rated voltage UL (Use Group D)	600 V
Rated current UL (Use Group D)	5 A

Ratings per CSA

Approvals per	CSA
Rated voltage CSA (Use Group C)	300 V
Rated current CSA (Use Group C)	41 A
Rated voltage CSA (Use Group D)	600 V
Rated current CSA (Use Group D)	5 A

Connection data

Total number of potentials	4
Number of connection types	1
Number of levels	1

Connection 1

Pole number	4

Physical data

Pin spacing	7.62 mm / 0.3 inches
Width	33.36 mm / 1.313 inches

Subject to changes. Please also observe the further product documentation!

WAGO GmbH & Co. KG
Hansastr. 27
32423 Minden
Phone: +49571 887-0 | Fax: +49571 887-169
Email: info.de@wago.com | Web: www.wago.com

Do you have any questions about our products?
We are always happy to take your call at +49 (571) 887-44222.

Height	33 mm / 1.299 inches
Height	29 mm / 1.142 inches
Depth	14.8 mm / 0.583 inches
Length	4 mm
Length	1 x 1.2 mm
Length	1.7 $^{(+0.1)}$ mm

Mechanical Data

Coding	Yes
Anti-rotation protection	Yes

Plug-in connection

Contact type (pluggable connector)	Male connector/plug
Connector (connection type)	for PCB
Mismating protection	Yes
Plugging without loss of pin spacing	No
Mating direction to the PCB	90 °
Locking of plug-in connection	none

PCB contact

PCB contact	THT
Solder pin arrangement	over the entire male connector (in-line)
Number of solder pins per potential	3

Material Data

Note (material data)	Information on material specifications can be found here
Color	light gray
Material group	I
Insulation material	Polyamide (PA66)
Flammability class per UL94	V0
Contact material	Electrolytic copper (E_{Cu})
Contact plating	Tin
Weight	11.5 g

Subject to changes. Please also observe the further product documentation!

WAGO GmbH & Co. KG
Hansastr. 27
32423 Minden
Phone: +49571 887-0 | Fax: +49571 887-169
Email: info.de@wago.com | Web: www.wago.com

Do you have any questions about our products?
We are always happy to take your call at +49 (571) 887-44222.

Environmental requirements

Limit temperature range	-60 … +105 °C
Processing temperature	-35 … +60 °C

Commercial data

Product Group	3 (Multi Conn. System)
eCl@ss 10.0	27-44-04-02
eCl@ss 10.0	27-44-04-02
ETIM 8.0	EC002637
ETIM 8.0	EC002637
PU (SPU)	24 pcs
Packaging type	box
Country of origin	PL
GTIN	4045454002121
Customs tariff number	85366990990

Environmental Product Compliance

RoHS Compliance Status	Compliant,No Exemption

Approvals / Certificates

General approvals

Logo	Approval	Additional Approval Text	Certificate name
	CB DEKRA Certification B.V.	IEC 61984	NL-61360 /M1
	CSA DEKRA Certification B.V.	C22.2	1466354
	KEMA/KEUR DEKRA Certification B.V.	EN 61984	71-116057
	UR Underwriters Laboratories Inc.	UL 1059	E45172
	UR Underwriters Laboratories Inc.	UL 1059	E45172

Subject to changes. Please also observe the further product documentation!

WAGO GmbH & Co. KG
Hansastr. 27
32423 Minden
Phone: +49571 887-0 | Fax: +49571 887-169
Email: info.de@wago.com | Web: www.wago.com

Do you have any questions about our products?
We are always happy to take your call at +49 (571) 887-44222.

Declarations of conformity and manufacturer's declarations

Logo	Approval	Additional Approval Text	Certificate name
	Railway WAGO GmbH & Co. KG	-	Railway Ready

Approvals for marine applications

Logo	Approval	Additional Approval Text	Certificate name
	LR Lloyds Register	IEC 61984	96/20035 (E5)

Counterpart

Item no.831-3104
1-conductor female connector; Push-in CAGE CLAMP®; 10 mm²; Pin spacing 7.62 mm; 4-pole; 100% protected against mismating; 10,00 mm²; light gray

www.wago.com/831-3104

Item no.831-3104/000-9037
1-conductor female connector; Push-in CAGE CLAMP®; 10 mm²; Pin spacing 7.62 mm; 4-pole; 100% protected against mismating; direct marking; 10,00 mm²; light gray

www.wago.com/831-3104/000-9037

Item no.831-3104/037-000
1-conductor female connector; Push-in CAGE CLAMP®; 10 mm²; Pin spacing 7.62 mm; 4-pole; 100% protected against mismating; Lateral locking levers; 10,00 mm²; light gray

www.wago.com/831-3104/037-000

Item no.831-3104/037-9037
1-conductor female connector; Push-in CAGE CLAMP®; 10 mm²; Pin spacing 7.62 mm; 4-pole; 100% protected against mismating; Lateral locking levers; direct marking; 10,00 mm²; light gray

www.wago.com/831-3104/037-9037

Item no.831-3104/135-000
1-conductor female connector; Push-in CAGE CLAMP®; 10 mm²; Pin spacing 7.62 mm; 4-pole; 100% protected against mismating; Gripping plate; 10,00 mm²; light gray

www.wago.com/831-3104/135-000

Subject to changes. Please also observe the further product documentation!

WAGO GmbH & Co. KG
Hansastr. 27
32423 Minden
Phone: +49571 887-0 | Fax: +49571 887-169
Email: info.de@wago.com | Web: www.wago.com

Do you have any questions about our products?
We are always happy to take your call at +49 (571) 887-44222.

Item no.831-1104
1-conductor female connector; lever; Push-in CAGE CLAMP®; 10 mm²; Pin spacing 7.62 mm; 4-pole; 100% protected against mismating; 10,00 mm²; light gray

www.wago.com/831-1104

Item no.831-1104/037-000
1-conductor female connector; lever; Push-in CAGE CLAMP®; 10 mm²; Pin spacing 7.62 mm; 4-pole; 100% protected against mismating; Lateral locking levers; 10,00 mm²; light gray

www.wago.com/831-1104/037-000

Item no.831-1104/038-000
1-conductor female connector; lever; Push-in CAGE CLAMP®; 10 mm²; Pin spacing 7.62 mm; 4-pole; 100% protected against mismating; Lateral locking levers; 10,00 mm²; light gray

www.wago.com/831-1104/038-000

Item no.831-1104/320-000
1-conductor female connector; lever; Push-in CAGE CLAMP®; 10 mm²; Pin spacing 7.62 mm; 4-pole; 100% protected against mismating; Centered locking levers; 10,00 mm²; light gray

www.wago.com/831-1104/320-000

Item no.831-1104/322-000
1-conductor female connector; lever; Push-in CAGE CLAMP®; 10 mm²; Pin spacing 7.62 mm; 4-pole; 100% protected against mismating; Centered locking levers; 10,00 mm²; light gray

www.wago.com/831-1104/322-000

Optional accessories

Coding

Coding

Item no.: 831-500
Coding pin carrier with six coding pins; orange

www.wago.com/831-500

Downloads

Documentation

Additional Information

Technical Section Technical explanations	2019 年4月3日	pdf 2.0 MB	Download

CAD/CAE-Data

CAD data

2D/3D Models 831-3604	URL	Download

Subject to changes. Please also observe the further product documentation!

WAGO GmbH & Co. KG
Hansastr. 27
32423 Minden
Phone: +49571 887-0 | Fax: +49571 887-169
Email: info.de@wago.com | Web: www.wago.com

Do you have any questions about our products?
We are always happy to take your call at +49 (571) 887-44222.

PCB Design

Symbol and Footprint 831-3604	URL	Download

CAx data for your PCB design, consisting of "schematic symbols and PCB footprints", allow easy integration of the WAGO component into your development environment.

Supported formats:

- Accel EDA 14 & 15
- Altium 6 to current version
- Cadence Allegro
- DesignSpark
- Eagle Libraries
- KiCad
- Mentor Graphics BoardStation
- Mentor Graphics Design Architect
- Mentor Graphics Design Expedition 99 and 2000
- OrCAD 9.X PCB and Capture
- PADS PowerPCB 3, 3.5, 4.X, and 5.X
- PADS PowerPCB and PowerLogic 3.0
- PCAD 2000, 2001, 2002, 2004, and 2006
- Pulsonix 8.5 or newer
- STL
- 3D STEP
- TARGET 3001!
- View Logic ViewDraw
- Quadcept
- Zuken CadStar 3 and 4
- Zuken CR-5000 and CR-8000

PCB Component Libraries (EDA), PCB CAD Library Ultra Librarian

CAE data

ZUKEN Portal 831-3604	URL	Download
EPLAN Data Portal 831-3604	URL	Download

Subject to changes. Please also observe the further product documentation!

WAGO GmbH & Co. KG
Hansastr. 27
32423 Minden
Phone: +49571 887-0 | Fax: +49571 887-169
Email: info.de@wago.com | Web: www.wago.com

Do you have any questions about our products?
We are always happy to take your call at +49 (571) 887-44222.

Environmental Product Compliance

Compliance Search

Environmental Product Compliance 831-3604 THT male header; 1.0 x 1.2 mm solder pin; straight; 100% protected against mismating; Pin spacing 7.62 mm; 4-pole; light gray	URL	Download

Installation Notes

Coding

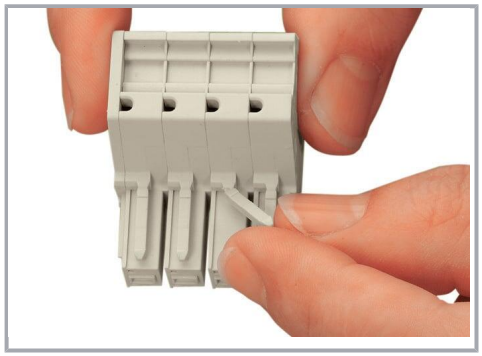

Break or cut off coding pin from female connector.

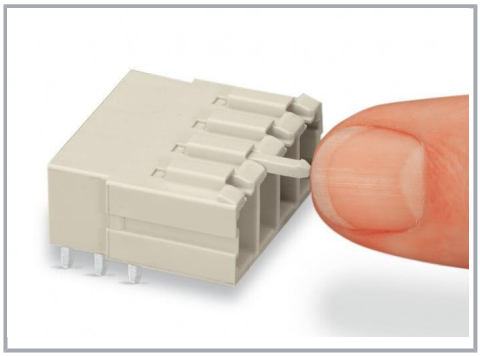

Insert coding pin into male header (break first) until it engages.

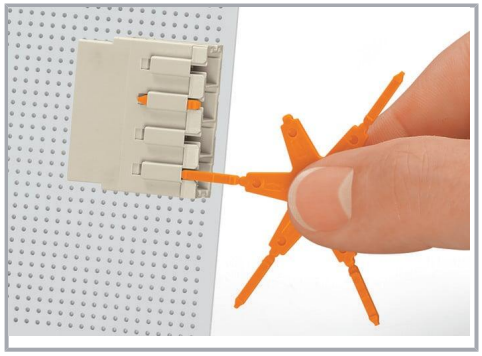

Coding a THT male header by inserting a coding pin.

Product family

MCS MAXI 6
Show all products from the family

Subject to changes. Please also observe the further product documentation!

WAGO GmbH & Co. KG
Hansastr. 27
32423 Minden
Phone: +49571 887-0 | Fax: +49571 887-169
Email: info.de@wago.com | Web: www.wago.com

Do you have any questions about our products?
We are always happy to take your call at +49 (571) 887-44222.