Data sheet | Item number: 870-681

3-conductor through terminal block; 2.5 mm²; lateral marker slots; for DIN-rail 35 x 15 and 35 x 7.5; CAGE CLAMP®; 2,50 mm²; gray

www.wago.com/870-681

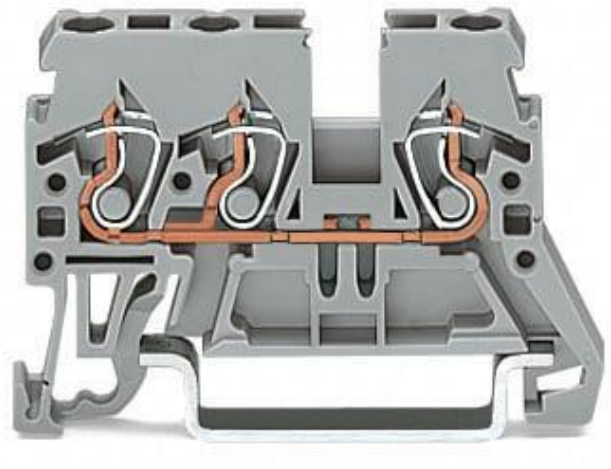

Color:

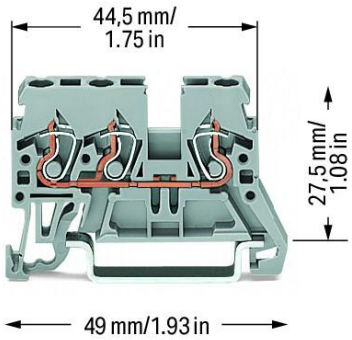

Data

Notes

Safety information	Max. insulation diameter: 4.4 mm

Subject to changes. Please also observe the further product documentation!

WAGO GmbH & Co. KG
Hansastr. 27
32423 Minden
Phone: +49571 887-0 | Fax: +49571 887-169
Email: info.de@wago.com | Web: www.wago.com

Do you have any questions about our products?
We are always happy to take your call at +49 (571) 887-44222.

Electrical data

Ratings per IEC/EN

Ratings per	IEC/EN 60947-7-1
Nominal voltage (III/3)	500 V
Rated impulse voltage (III/3)	6 kV
Rated current	24 A
Legend (ratings)	(III / 3) ≙ Overvoltage category III / Pollution degree 3

Power Loss

Power loss, per pole (potential)	0.766 W
Rated current I_N for specified power loss	24 A
Resistance value for specified, current-dependent power loss	0.001 Ω

Connection data

Connection points	3
Total number of potentials	1
Number of levels	1

Connection 1

Connection technology	CAGE CLAMP®
Actuation type	Operating tool
Connectable conductor materials	Copper
Solid conductor	0.08 … 2.5 mm² / 28 … 12 AWG
Fine-stranded conductor	0.08 … 4 mm² / 28 … 12 AWG
Fine-stranded conductor; with insulated ferrule	0.08 … 1.5 mm² / 28 … 14 AWG
Strip length	6 … 7 mm / 0.24 … 0.28 inches
Wiring direction	Front-entry wiring

Physical data

Width	5 mm / 0.197 inches
Height	49 mm / 1.929 inches
Depth from upper-edge of DIN-rail	27.5 mm / 1.083 inches

Subject to changes. Please also observe the further product documentation!

WAGO GmbH & Co. KG
Hansastr. 27
32423 Minden
Phone: +49571 887-0 | Fax: +49571 887-169
Email: info.de@wago.com | Web: www.wago.com

Do you have any questions about our products?
We are always happy to take your call at +49 (571) 887-44222.

Mechanical Data

Design	horizontal type
Mounting type	DIN-35 rail
Marking level	Side marking

Material Data

Note (material data)	Information on material specifications can be found here
Color	gray
Material group	I
Insulation material	Polyamide (PA66)
Flammability class per UL94	V0
Fire load	0.116 MJ
Weight	6 g

Environmental requirements

Processing temperature	-35 … +85 °C
Continuous operating temperature	-60 … +105 °C

Commercial data

eCl@ss 10.0	27-14-11-20
eCl@ss 10.0	27-14-11-20
ETIM 8.0	EC000897
ETIM 8.0	EC000897
PU (SPU)	100 pcs
Packaging type	box
Country of origin	DE
GTIN	4045454094553
Customs tariff number	85369010000

Environmental Product Compliance

RoHS Compliance Status	Compliant,No Exemption

Approvals / Certificates

General approvals

Subject to changes. Please also observe the further product documentation!

WAGO GmbH & Co. KG
Hansastr. 27
32423 Minden
Phone: +49571 887-0 | Fax: +49571 887-169
Email: info.de@wago.com | Web: www.wago.com

Do you have any questions about our products?
We are always happy to take your call at +49 (571) 887-44222.

Logo	Approval	Additional Approval Text	Certificate name
	CCA DEKRA Certification B.V.	EN 60947	NTR NL 7468
	CCA DEKRA Certification B.V.	EN 60947	2189801.01
	cURus UL International Germany GmbH	UL 1059	E45172

Declarations of conformity and manufacturer's declarations

Logo	Approval	Additional Approval Text	Certificate name
	EU-Declaration of Conformity WAGO GmbH & Co. KG	-	-
	UK-Declaration of Conformity WAGO GmbH & Co. KG	-	-

Approvals for marine applications

Logo	Approval	Additional Approval Text	Certificate name
	ABS American Bureau of Shipping	-	20-HG1941090-PDA
	DNV GL Det Norske Veritas, Germanischer Lloyd	-	TAE00001V2
	LR Lloyds Register	EN 60947	91/20112 (E9)

Subject to changes. Please also observe the further product documentation!

WAGO GmbH & Co. KG
Hansastr. 27
32423 Minden
Phone: +49571 887-0 | Fax: +49571 887-169
Email: info.de@wago.com | Web: www.wago.com

Do you have any questions about our products?
We are always happy to take your call at +49 (571) 887-44222.

Required accessories

End plate

End plate

	Item no.: 870-934 End and intermediate plate; 1 mm thick; orange	www.wago.com/870-934
	Item no.: 870-933 End and intermediate plate; 1 mm thick; gray	www.wago.com/870-933

Optional accessories

End plate

End plate

	Item no.: 870-947 Separator plate; 1 mm thick; orange	www.wago.com/870-947
	Item no.: 870-946 Separator plate; 1 mm thick; gray	www.wago.com/870-946

Ferrule

Ferrule

	Item no.: 216-123 Ferrule; Sleeve for 1 mm² / AWG 18; uninsulated; electro-tin plated; silver-colored	www.wago.com/216-123
	Item no.: 216-122 Ferrule; Sleeve for 0.75 mm² / AWG 20; uninsulated; electro-tin plated; silver-colored	www.wago.com/216-122
	Item no.: 216-124 Ferrule; Sleeve for 1.5 mm² / AWG 16; uninsulated; electro-tin plated	www.wago.com/216-124
	Item no.: 216-132 Ferrule; Sleeve for 0.34 mm² / AWG 24; uninsulated; electro-tin plated	www.wago.com/216-132
	Item no.: 216-121 Ferrule; Sleeve for 0.5 mm² / AWG 22; uninsulated; electro-tin plated; silver-colored	www.wago.com/216-121
	Item no.: 216-131 Ferrule; Sleeve for 0.25 mm² / AWG 24; uninsulated; electro-tin plated; silver-colored	www.wago.com/216-131
	Item no.: 216-223 Ferrule; Sleeve for 1 mm² / AWG 18; insulated; electro-tin plated; red	www.wago.com/216-223
	Item no.: 216-222 Ferrule; Sleeve for 0.75 mm² / 18 AWG; insulated; electro-tin plated; gray	www.wago.com/216-222
	Item no.: 216-221 Ferrule; Sleeve for 0.5 mm² / 20 AWG; insulated; electro-tin plated; white	www.wago.com/216-221
	Item no.: 216-224	

Subject to changes. Please also observe the further product documentation!

WAGO GmbH & Co. KG
Hansastr. 27
32423 Minden
Phone: +49571 887-0 | Fax: +49571 887-169
Email: info.de@wago.com | Web: www.wago.com

Do you have any questions about our products?
We are always happy to take your call at +49 (571) 887-44222.

	Ferrule; Sleeve for 1.5 mm² / AWG 16; insulated; electro-tin plated; black	www.wago.com/216-224
	Item no.: 216-321 Ferrule; Sleeve for 0.25 mm² / AWG 24; insulated; electro-tin plated; yellow	www.wago.com/216-321
	Item no.: 216-322 Ferrule; Sleeve for 0.34 mm² / 22 AWG; insulated; electro-tin plated; light turquoise	www.wago.com/216-322

Mounting

Mounting accessories

	Item no.: 209-106 Mounting carrier; for isolated mounting on DIN 35 rails; gray	www.wago.com/209-106
	Item no.: 249-116 Screwless end stop; 6 mm wide; for DIN-rail 35 x 15 and 35 x 7.5; gray	www.wago.com/249-116
	Item no.: 249-117 Screwless end stop; 10 mm wide; for DIN-rail 35 x 15 and 35 x 7.5; gray	www.wago.com/249-117

Insulation stop

Insulation stop

	Item no.: 280-472 Insulation stop; 0.75 - 1 mm²; 5 pieces/strip; black	www.wago.com/280-472
	Item no.: 280-470 Insulation stop; 0.08 - 0.2 mm² "s" (0.14 mm² "f-st"); 5 pieces/strip; white	www.wago.com/280-470
	Item no.: 280-471 Insulation stop; 0.25 - 0.5 mm²; 5 pieces/strip; light gray	www.wago.com/280-471

Jumpers

Jumper

	Item no.: 870-402 Jumper; 2-way; insulated; light gray	www.wago.com/870-402
	Item no.: 870-404	www.wago.com/870-404
	Item no.: 870-405 Jumper; 5-way; insulated; light gray	www.wago.com/870-405
	Item no.: 870-407 Jumper; 7-way; insulated; light gray	www.wago.com/870-407
	Item no.: 870-408 Jumper; 8-way; insulated; light gray	www.wago.com/870-408

Subject to changes. Please also observe the further product documentation!

WAGO GmbH & Co. KG
Hansastr. 27
32423 Minden
Phone: +49571 887-0 | Fax: +49571 887-169
Email: info.de@wago.com | Web: www.wago.com

Do you have any questions about our products?
We are always happy to take your call at +49 (571) 887-44222.

	Item no.: 870-403 Jumper; 3-way; insulated; light gray	www.wago.com/870-403
	Item no.: 870-409 Jumper; 9-way; insulated; light gray	www.wago.com/870-409
	Item no.: 870-406 Jumper; 6-way; insulated; light gray	www.wago.com/870-406
	Item no.: 870-433 Jumper; from 1 to 3; insulated; light gray	www.wago.com/870-433
	Item no.: 870-435 Jumper; from 1 to 5; insulated; light gray	www.wago.com/870-435
	Item no.: 870-410 Jumper; 10-way; insulated; light gray	www.wago.com/870-410
	Item no.: 870-434 Jumper; from 1 to 4; insulated; light gray	www.wago.com/870-434
	Item no.: 870-436 Jumper; from 1 to 6; insulated; light gray	www.wago.com/870-436
	Item no.: 870-440 Jumper; from 1 to 10; insulated; light gray	www.wago.com/870-440
	Item no.: 870-437 Jumper; from 1 to 7; insulated; light gray	www.wago.com/870-437
	Item no.: 870-439 Jumper; from 1 to 9; insulated; light gray	www.wago.com/870-439
	Item no.: 870-438 Jumper; from 1 to 8; insulated; light gray	www.wago.com/870-438
	Item no.: 870-406/020-000 Delta jumper; insulated; light gray	www.wago.com/870-406/020-000

Testing and measuring

Testing accessories

	Item no.: 870-425 Tap-off module; with anti-rotation protection; modular; suitable for 870 Series terminal blocks with jumper slots in the current bar; gray	www.wago.com/870-425
	Item no.: 870-426 Tap-off module; modular; suitable for 870 Series terminal blocks with jumper slots in the current bar; gray	www.wago.com/870-426

Subject to changes. Please also observe the further product documentation!

WAGO GmbH & Co. KG
Hansastr. 27
32423 Minden
Phone: +49571 887-0 | Fax: +49571 887-169
Email: info.de@wago.com | Web: www.wago.com

Do you have any questions about our products?
We are always happy to take your call at +49 (571) 887-44222.

	Item no.: 870-427 Spacer module; modular; bridging commoned terminal blocks; gray	www.wago.com/870-427

Protective warning marker

Cover

	Item no.: 280-405 Protective warning marker; for 5 terminal blocks; with high-voltage symbol, black; yellow	www.wago.com/280-405

Tool

Operating tool

	Item no.: 210-657 Operating tool; Blade: 3.5 x 0.5 mm; with a partially insulated shaft; short; multicoloured	www.wago.com/210-657
	Item no.: 210-658 Operating tool; Blade: 3.5 x 0.5 mm; with a partially insulated shaft; angled; short; multicoloured	www.wago.com/210-658
	Item no.: 210-720 Operating tool; Blade: 3.5 x 0.5 mm; with a partially insulated shaft; multicoloured	www.wago.com/210-720

Marking accessories

Marking strip

	Item no.: 709-196 Marking strips; for laser printer; translucent	www.wago.com/709-196
	Item no.: 709-178 Marking strips; on reel; 7.5 mm wide; not stretchable; plain; snap-on type; white	www.wago.com/709-178
	Item no.: 709-177 Marking strips; on reel; 7.5 mm wide; not stretchable; plain; snap-on type; translucent	www.wago.com/709-177

Marker

	Item no.: 2009-115/000-002 WMB-Inline; for Smart Printer; 1500 pieces on roll; stretchable 5 - 5.2 mm; plain; snap-on type; yellow	www.wago.com/2009-115/000-002
	Item no.: 2009-115/000-007 WMB-Inline; for Smart Printer; 1500 pieces on roll; stretchable 5 - 5.2 mm; plain; snap-on type; gray	www.wago.com/2009-115/000-007
	Item no.: 2009-115/000-017 WMB-Inline; for Smart Printer; 1500 pieces on roll; stretchable 5 - 5.2 mm; plain; snap-on type; light green	www.wago.com/2009-115/000-017

Subject to changes. Please also observe the further product documentation!

WAGO GmbH & Co. KG
Hansastr. 27
32423 Minden
Phone: +49571 887-0 | Fax: +49571 887-169
Email: info.de@wago.com | Web: www.wago.com

Do you have any questions about our products?
We are always happy to take your call at +49 (571) 887-44222.

	Item no.: 2009-115/000-023 WMB-Inline; for Smart Printer; 1500 pieces on roll; stretchable 5 - 5.2 mm; plain; snap-on type; green	www.wago.com/2009-115/000-023
	Item no.: 2009-115/000-024 WMB-Inline; for Smart Printer; 1500 pieces on roll; stretchable 5 - 5.2 mm; plain; snap-on type; violet	www.wago.com/2009-115/000-024
	Item no.: 2009-145/000-006 Mini-WSB Inline; for Smart Printer; 1700 pieces on roll; stretchable 5 - 5.2 mm; plain; snap-on type; blue	www.wago.com/2009-145/000-006
	Item no.: 2009-145 Mini-WSB Inline; for Smart Printer; 1700 pieces on roll; stretchable 5 - 5.2 mm; plain; snap-on type; white	www.wago.com/2009-145
	Item no.: 2009-145/000-002 Mini-WSB Inline; for Smart Printer; 1700 pieces on roll; stretchable 5 - 5.2 mm; plain; snap-on type; yellow	www.wago.com/2009-145/000-002
	Item no.: 2009-145/000-007 Mini-WSB Inline; for Smart Printer; 1700 pieces on roll; stretchable 5 - 5.2 mm; plain; snap-on type; gray	www.wago.com/2009-145/000-007
	Item no.: 2009-145/000-005 Mini-WSB Inline; for Smart Printer; 1700 pieces on roll; stretchable 5 - 5.2 mm; plain; snap-on type; red	www.wago.com/2009-145/000-005
	Item no.: 2009-145/000-012 Mini-WSB Inline; for Smart Printer; 1700 pieces on roll; stretchable 5 - 5.2 mm; plain; snap-on type; orange	www.wago.com/2009-145/000-012
	Item no.: 2009-145/000-023 Mini-WSB Inline; for Smart Printer; 1700 pieces on roll; stretchable 5 - 5.2 mm; plain; snap-on type; green	www.wago.com/2009-145/000-023
	Item no.: 2009-145/000-024 Mini-WSB Inline; for Smart Printer; 1700 pieces on roll; stretchable 5 - 5.2 mm; plain; snap-on type; violet	www.wago.com/2009-145/000-024
	Item no.: 2009-115 WMB-Inline; for Smart Printer; 1500 pieces on roll; stretchable 5 - 5.2 mm; plain; snap-on type; white	www.wago.com/2009-115
	Item no.: 248-501/000-006 Mini-WSB marking card; as card; not stretchable; plain; snap-on type; blue	www.wago.com/248-501/000-006
	Item no.: 248-501/000-007 Mini-WSB marking card; as card; not stretchable; plain; snap-on type; gray	www.wago.com/248-501/000-007

Subject to changes. Please also observe the further product documentation!

WAGO GmbH & Co. KG
Hansastr. 27
32423 Minden
Phone: +49571 887-0 | Fax: +49571 887-169
Email: info.de@wago.com | Web: www.wago.com

Do you have any questions about our products?
We are always happy to take your call at +49 (571) 887-44222.

Item no.: 248-501/000-002
Mini-WSB marking card; as card; not stretchable; plain; snap-on type; yellow

www.wago.com/248-501/000-002

Item no.: 248-501/000-012
Mini-WSB marking card; as card; not stretchable; plain; snap-on type; orange

www.wago.com/248-501/000-012

Item no.: 248-501
Mini-WSB marking card; as card; not stretchable; plain; snap-on type; white

www.wago.com/248-501

Item no.: 248-501/000-017
Mini-WSB marking card; as card; not stretchable; plain; snap-on type; light green

www.wago.com/248-501/000-017

Item no.: 248-501/000-005
Mini-WSB marking card; as card; not stretchable; plain; snap-on type; red

www.wago.com/248-501/000-005

Item no.: 248-501/000-024
Mini-WSB marking card; as card; not stretchable; plain; snap-on type; violet

www.wago.com/248-501/000-024

Item no.: 248-501/000-023
Mini-WSB marking card; as card; not stretchable; plain; snap-on type; green

www.wago.com/248-501/000-023

Item no.: 793-5501/000-007
WMB marking card; as card; for terminal block width 5 - 17.5 mm; stretchable 5 - 5.2 mm; plain; snap-on type; gray

www.wago.com/793-5501/000-007

Item no.: 793-5501/000-012
WMB marking card; as card; for terminal block width 5 - 17.5 mm; stretchable 5 - 5.2 mm; plain; snap-on type; orange

www.wago.com/793-5501/000-012

Item no.: 793-5501/000-017
WMB marking card; as card; for terminal block width 5 - 17.5 mm; stretchable 5 - 5.2 mm; plain; snap-on type; light green

www.wago.com/793-5501/000-017

Item no.: 793-5501/000-023
WMB marking card; as card; for terminal block width 5 - 17.5 mm; stretchable 5 - 5.2 mm; plain; snap-on type; green

www.wago.com/793-5501/000-023

Subject to changes. Please also observe the further product documentation!

WAGO GmbH & Co. KG
Hansastr. 27
32423 Minden
Phone: +49571 887-0 | Fax: +49571 887-169
Email: info.de@wago.com | Web: www.wago.com

Do you have any questions about our products?
We are always happy to take your call at +49 (571) 887-44222.

Item no.: 793-5501/000-024
WMB marking card; as card; for terminal block width 5 - 17.5 mm; stretchable 5 - 5.2 mm; plain; snap-on type; violet
www.wago.com/793-5501/000-024

Item no.: 793-501/000-002
WMB marking card; as card; not stretchable; plain; snap-on type; yellow
www.wago.com/793-501/000-002

Item no.: 793-501/000-007
WMB marking card; as card; not stretchable; plain; snap-on type; gray
www.wago.com/793-501/000-007

Item no.: 793-501/000-017
WMB marking card; as card; not stretchable; plain; snap-on type; light green
www.wago.com/793-501/000-017

Item no.: 793-501/000-012
WMB marking card; as card; not stretchable; plain; snap-on type; orange
www.wago.com/793-501/000-012

Item no.: 793-501/000-023
WMB marking card; as card; not stretchable; plain; snap-on type; green
www.wago.com/793-501/000-023

Item no.: 793-501/000-006
WMB marking card; as card; not stretchable; plain; snap-on type; blue
www.wago.com/793-501/000-006

Item no.: 793-501/000-005
WMB marking card; as card; not stretchable; plain; snap-on type; red
www.wago.com/793-501/000-005

Item no.: 793-501
WMB marking card; as card; not stretchable; plain; snap-on type; white
www.wago.com/793-501

Item no.: 793-501/000-024
WMB marking card; as card; not stretchable; plain; snap-on type; violet
www.wago.com/793-501/000-024

Item no.: 793-5501/000-005
WMB marking card; as card; for terminal block width 5 - 17.5 mm; stretchable 5 - 5.2 mm; plain; snap-on type; red
www.wago.com/793-5501/000-005

Subject to changes. Please also observe the further product documentation!

WAGO GmbH & Co. KG
Hansastr. 27
32423 Minden
Phone: +49571 887-0 | Fax: +49571 887-169
Email: info.de@wago.com | Web: www.wago.com

Do you have any questions about our products?
We are always happy to take your call at +49 (571) 887-44222.

	Item no.: 793-5501/000-002 WMB marking card; as card; for terminal block width 5 - 17.5 mm; stretchable 5 - 5.2 mm; plain; snap-on type; yellow	www.wago.com/793-5501/000-002
	Item no.: 793-5501/000-006 WMB marking card; as card; for terminal block width 5 - 17.5 mm; stretchable 5 - 5.2 mm; plain; snap-on type; blue	www.wago.com/793-5501/000-006
	Item no.: 793-5501 WMB marking card; as card; for terminal block width 5 - 17.5 mm; stretchable 5 - 5.2 mm; plain; snap-on type; white	www.wago.com/793-5501
	Item no.: 2009-115/000-012 WMB-Inline; for Smart Printer; 1500 pieces on roll; stretchable 5 - 5.2 mm; plain; snap-on type; orange	www.wago.com/2009-115/000-012
	Item no.: 2009-115/000-006 WMB-Inline; for Smart Printer; 1500 pieces on roll; stretchable 5 - 5.2 mm; plain; snap-on type; blue	www.wago.com/2009-115/000-006
Group marker carrier		
	Item no.: 870-183 Adaptor; gray	www.wago.com/870-183
	Item no.: 870-182 Adaptor; gray	www.wago.com/870-182
	Item no.: 870-184 Adaptor; gray	www.wago.com/870-184
Carrier rail		
Mounting accessories		
	Item no.: 210-197 Steel carrier rail; 35 x 15 mm; 1.5 mm thick; 2 m long; slotted; similar to EN 60715; silver-colored	www.wago.com/210-197
	Item no.: 210-198 Copper carrier rail; 35 x 15 mm; 2.3 mm thick; 2 m long; unslotted; according to EN 60715; copper-colored	www.wago.com/210-198
	Item no.: 210-504 Steel carrier rail; 35 x 7.5 mm; 1 mm thick; 2 m long; slotted; galvanized; according to EN 60715; silver-colored	www.wago.com/210-504
	Item no.: 210-505 Steel carrier rail; 35 x 7.5 mm; 1 mm thick; 2 m long; unslotted; galvanized; according to EN 60715; silver-colored	www.wago.com/210-505
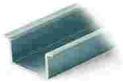	**Item no.: 210-506** Steel carrier rail; 35 x 15 mm; 1.5 mm thick; 2 m long; unslotted; galvanized; similar to EN 60715; silver-colored	www.wago.com/210-506
	Item no.: 210-508	

Subject to changes. Please also observe the further product documentation!

WAGO GmbH & Co. KG
Hansastr. 27
32423 Minden
Phone: +49571 887-0 | Fax: +49571 887-169
Email: info.de@wago.com | Web: www.wago.com

Do you have any questions about our products?
We are always happy to take your call at +49 (571) 887-44222.

	Steel carrier rail; 35 x 15 mm; 1.5 mm thick; 2 m long; slotted; galvanized; similar to EN 60715; silver-colored	www.wago.com/210-508
	Item no.: 210-113 Steel carrier rail; 35 x 7.5 mm; 1 mm thick; 2 m long; unslotted; according to EN 60715; silver-colored	www.wago.com/210-113
	Item no.: 210-118 Steel carrier rail; 35 x 15 mm; 2.3 mm thick; 2 m long; unslotted; according to EN 60715; silver-colored	www.wago.com/210-118
	Item no.: 210-112 Steel carrier rail; 35 x 7.5 mm; 1 mm thick; 2 m long; slotted; according to EN 60715; "Hole width 25 mm; silver-colored	www.wago.com/210-112
	Item no.: 210-114 Steel carrier rail; 35 x 15 mm; 1.5 mm thick; 2 m long; unslotted; similar to EN 60715; silver-colored	www.wago.com/210-114
	Item no.: 210-115 Steel carrier rail; 35 x 7.5 mm; 1 mm thick; 2 m long; slotted; according to EN 60715; "Hole width 18 mm; silver-colored	www.wago.com/210-115
	Item no.: 210-196 Aluminum carrier rail; 35 x 8.2 mm; 1.6 mm thick; 2 m long; unslotted; similar to EN 60715; silver-colored	www.wago.com/210-196

Downloads

Documentation

Bid Text

870-681 X81 - Datei	2019 年2月19 日	xml 3.3 kB	Download
870-681 doc - Datei	2017 年5月31 日	doc 25.1 kB	Download

Additional Information

Technical Section Technical explanations	pdf 2.2 MB	Download

CAD/CAE-Data

CAD data

2D/3D Models 870-681	URL	Download

CAE data

Subject to changes. Please also observe the further product documentation!

WAGO GmbH & Co. KG
Hansastr. 27
32423 Minden
Phone: +49571 887-0 | Fax: +49571 887-169
Email: info.de@wago.com | Web: www.wago.com

Do you have any questions about our products?
We are always happy to take your call at +49 (571) 887-44222.

EPLAN Data Portal 870-681	URL	Download
ZUKEN Portal 870-681	URL	Download
WSCAD Universe 870-681	URL	Download

Environmental Product Compliance

Compliance Search

Environmental Product Compliance 870-681 3-conductor through terminal block; 2.5 mm²; lateral marker slots; for DIN-rail 35 x 15 and 35 x 7.5; CAGE CLAMP®; 2,50 mm²; gray	URL	Download

Installation Notes

Installation

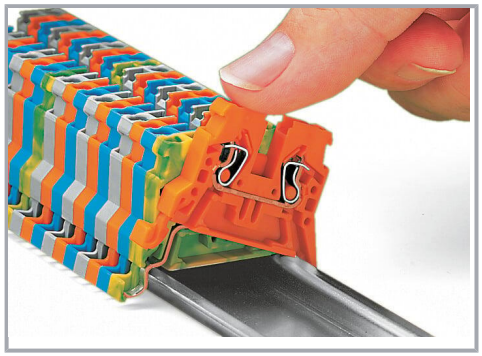

Snapping a rail-mount terminal block onto DIN-35 rail.

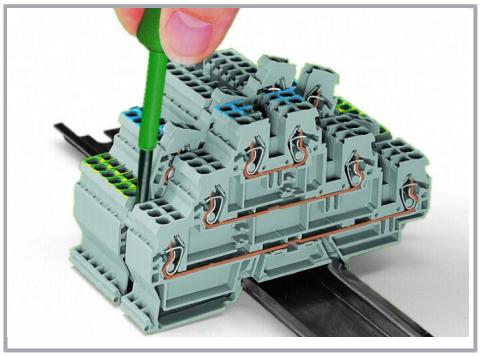

Removing a terminal block from the assembly.

Conductor termination

WAGO GmbH & Co. KG
Hansastr. 27
32423 Minden
Phone: +49571 887-0 | Fax: +49571 887-169
Email: info.de@wago.com | Web: www.wago.com

Do you have any questions about our products?
We are always happy to take your call at +49 (571) 887-44222.

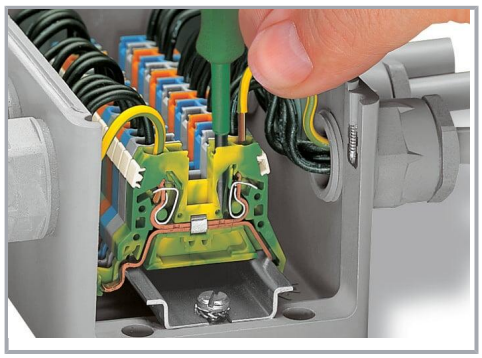

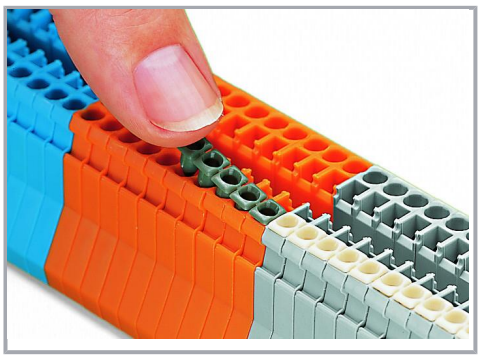

CAGE CLAMP® connection

Inserting a conductor via operating tool (0.08 … 4 mm² “f-st”).

With ferruled conductors, it is necessary to use a terminal block one size smaller than the conductor's nominal cross-section.

Inserting insulation stops into conductor entry holes of terminal strip.

Commoning

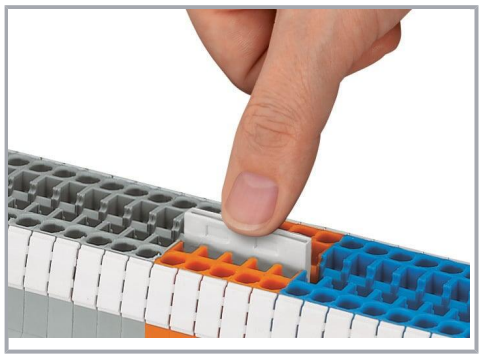

Push jumper bars down firmly until fully inserted. When using multipole bars, push alternately on the right and then left side until installed.

Push-in type jumper bars 1 – 3 – 5 – 7 or 1 – – 4 – – 7

upon request

Commoning with push-in type jumper bars:

Two parallel jumper slots are accommodated in one terminal block.

Subject to changes. Please also observe the further product documentation!

WAGO GmbH & Co. KG
Hansastr. 27
32423 Minden
Phone: +49571 887-0 | Fax: +49571 887-169
Email: info.de@wago.com | Web: www.wago.com

Do you have any questions about our products?
We are always happy to take your call at +49 (571) 887-44222.

Commoning terminal blocks of different sizes via step-down jumpers.

Testing

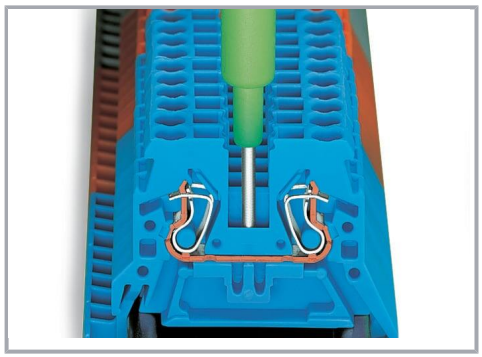

Testing with phase testing device, also possible with single-pole voltage tester.

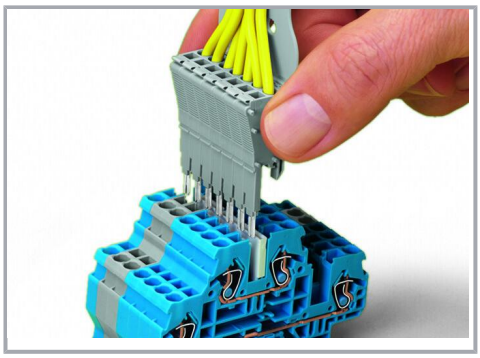

Testing is also possible using a pre-wired tap-off module assembly in the very same way as test plugs.

Cover

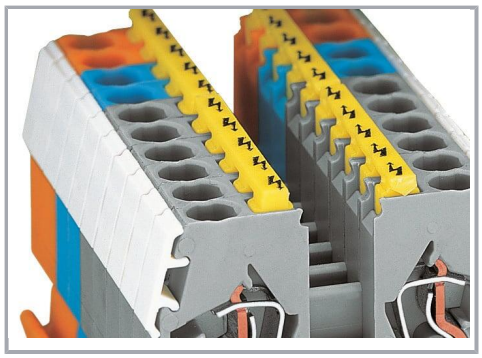

Protective warning markers (280-405), with a black high-voltage symbol

Subject to changes. Please also observe the further product documentation!

WAGO GmbH & Co. KG
Hansastr. 27
32423 Minden
Phone: +49571 887-0 | Fax: +49571 887-169
Email: info.de@wago.com | Web: www.wago.com

Do you have any questions about our products?
We are always happy to take your call at +49 (571) 887-44222.

Marking

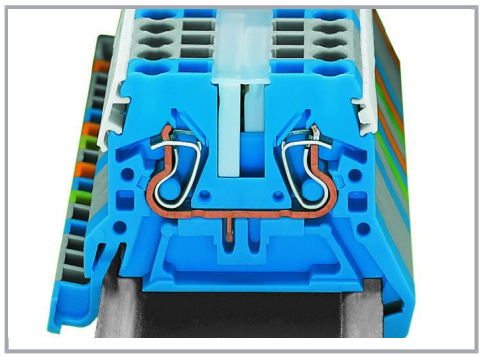

WMB markers in Mini-WSB marker slots

Translucent marking strip

Mini-WSB markers

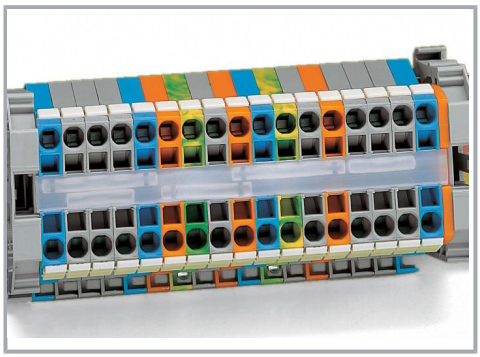

Translucent marking strip (709-196) – jumpers below may be visible.

In addition to the plastic marker strips, group marker carriers are now available for the WMB and WSB marking systems. They can be mounted in parallel to a push-in type jumper bar via the open jumper contact slot. It is also very useful if the marker slots on the side of the terminal block are hidden. The carriers are available in the following widths: 5 mm (0.197 inch), 10 mm (0.394 inch) and 15 mm (0.591 inch).

Notice:

Group marker carriers are not suitable for ground conductor terminal blocks and double potential terminal blocks as they have no jumper contact slots.

Subject to changes. Please also observe the further product documentation!

WAGO GmbH & Co. KG
Hansastr. 27
32423 Minden
Phone: +49571 887-0 | Fax: +49571 887-169
Email: info.de@wago.com | Web: www.wago.com

Do you have any questions about our products?
We are always happy to take your call at +49 (571) 887-44222.

Product family

Classic

EPSITRON® CLASSIC POWER: The Robust Power Supply – with Integrated TopBoost (Optional)

Show all products from the family

Subject to changes. Please also observe the further product documentation!

WAGO GmbH & Co. KG
Hansastr. 27
32423 Minden
Phone: +49571 887-0 | Fax: +49571 887-169
Email: info.de@wago.com | Web: www.wago.com

Do you have any questions about our products?
We are always happy to take your call at +49 (571) 887-44222.